SHIMANO

BAITRUNNER AERO BTA-GTE5000C

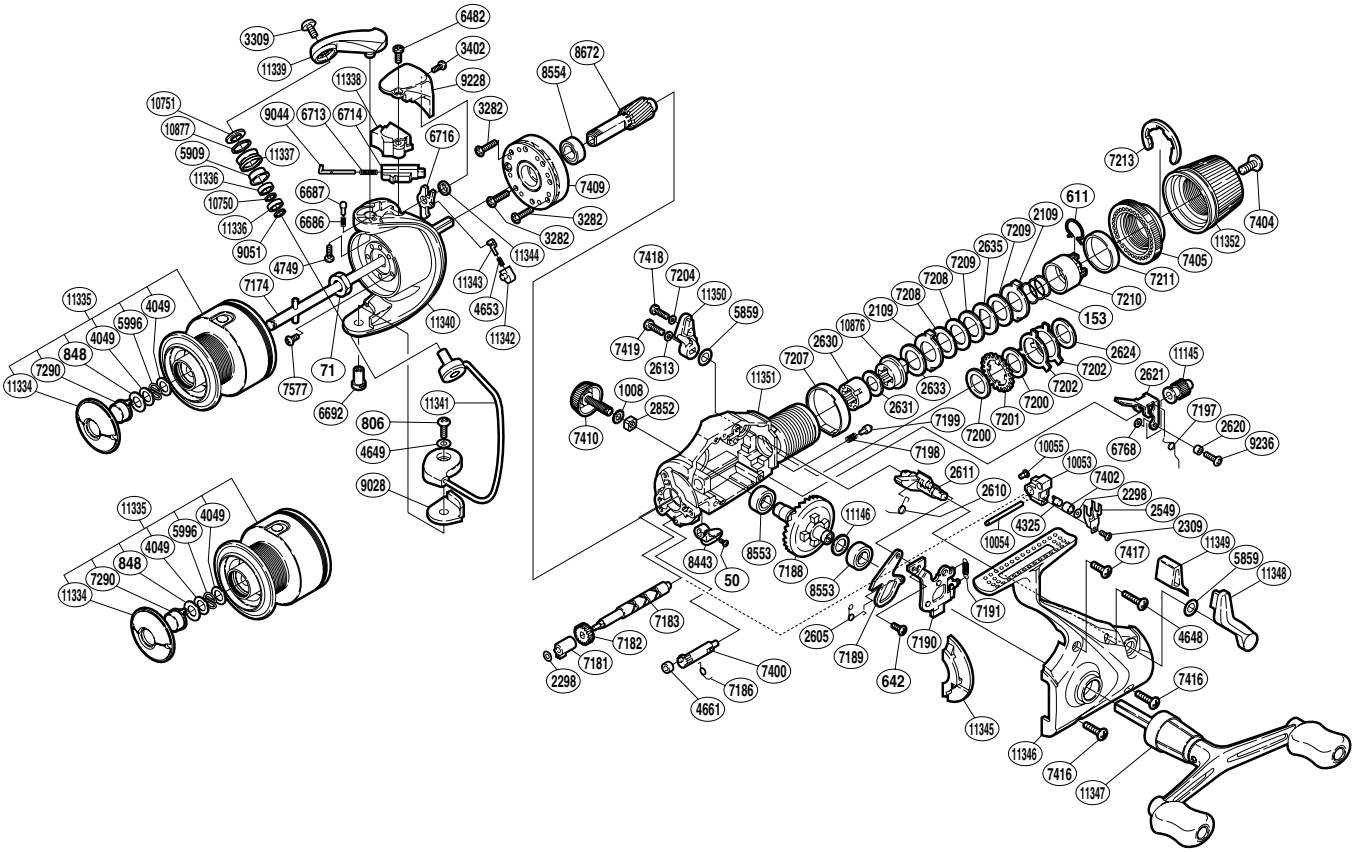

(1SG535002G)

Part No.	Description	Part No.	Description	Part No.	Description
RD 0050	Screw	RD 6687	Bail Arm Click	RD 7577	Screw
RD 0071	Rotor Nut	RD 6692	Bail Hold Support Shaft	RD 8443	Anti-Reverse Lever
RD 0153	Drag Coil Spring	RD 6713	Bail Spring	RD 8553	Ball Bearing
RD 0611	Hold Click Spring	RD 6714	Bail Spring Guide B	RD 8554	Ball Bearing
RD 0642	Clutch Plate Screw	RD 6716	Bail Trip Lever	RD 8672	Pinion Gear
RD 0806	Screw	RD 6768	Spacer	RD 9028	Bail Hold Support Spacer
RD 0848	Washer	RD 7174	Main Shaft	RD 9044	Bail Spring Guide A
RD 1008	Handle Lock Washer	RD 7181	Worm Bushing	RD 9051	Bearing Spacer
RD 2109	Eared Washer	RD 7182	Idle Gear	RD 9228	Bail Spring Cover Guard
RD 2298	Spacer	RD 7183	Worm Shaft	RD 9236	Screw
RD 2309	Screw	RD 7186	Anti-Reverse Cam Spring	RD10053	Oscillating Slider
RD 2549	Oscillating Slider Retainer	RD 7188	Drive Gear	RD10054	Oscillating Guide
RD 2605	Clutch Pawl Spring	RD 7189	Clutch Pawl	RD10055	Oscillating Guide Holder
RD 2610	Clutch Spring	RD 7190	Clutch Plate Assembly	RD10750	Bearing Spacer
RD 2611	BaitRunner Lever Shaft	RD 7191	BaitRunner Click Spring	RD10751	Line Roller Washer
RD 2613	Lock Washer	RD 7197	Clutch Shaft Spring	RD10876	Drag Shaft
RD 2620	Screw Collar	RD 7198	Dial Click Spring	RD10877	Line Roller Spacer
RD 2621	BaitRunner Clutch	RD 7199	Dial Click Shoe	RD11145	Clutch Shaft
RD 2624	Drag Washer	RD 7200	Drag Washer	RD11146	Washer
RD 2630	Free Spool Tension Shaft	RD 7201	Click Gear	RD11334	Push Button Collar
RD 2631	Drag Washer	RD 7202	Eared Washer	RD11335	Spool Assembly
RD 2633	Drag Washer	RD 7204	Lock Washer	RD11336	Ball Bearing
RD 2635	Key Washer	RD 7207	Dial Spacer	RD11337	Line Roller
RD 2852	Handle Screw Lock	RD 7208	Spacer	RD11338	Bail Spring Cover
RD 3282	Screw	RD 7209	Drag Washer	RD11339	Bail Arm
RD 3309	Screw	RD 7210	Pressure Screw	RD11340	Rotor
RD 3402	Screw	RD 7211	Dial Washer	RD11341	Bail Assembly
RD 4049	Washer	RD 7213	Dial Retainer Ring	RD11342	Lever Spring Guide B
RD 4325	Oscillating Pawl	RD 7290	Push Button	RD11343	Lever Spring Guide A
RD 4628	Screw	RD 7400	Anti-Reverse Cam	RD11344	Trip Lever Washer
RD 4649	Spacer	RD 7402	Oscillating Slider Bushing	RD11345	Side Cover Flange
RD 4653	Lever Spring	RD 7404	Screw	RD11346	Side Cover
RD 4661	Anti-Reverse Cam Ring	RD 7405	BaitRunner Tension Dial	RD11347	Double Paddle Handle Assembly
RD 4749	Screw	RD 7409	Roller Clutch Assembly	RD11348	BaitRunner Lever Arm L
RD 5859	Spacer	RD 7410	Handle Screw Cap	RD11349	BaitRunner Lever Bridge
RD 5909	Line Roller Bushing	RD 7416	Screw	RD11350	BaitRunner Lever Arm R
RD 5996	Locking Spring	RD 7417	Screw	RD11351	Body
RD 6482	Screw	RD 7418	Screw	RD11352	Drag Knob
RD 6686	Click Spring	RD 7419	Screw		