CORSAIR

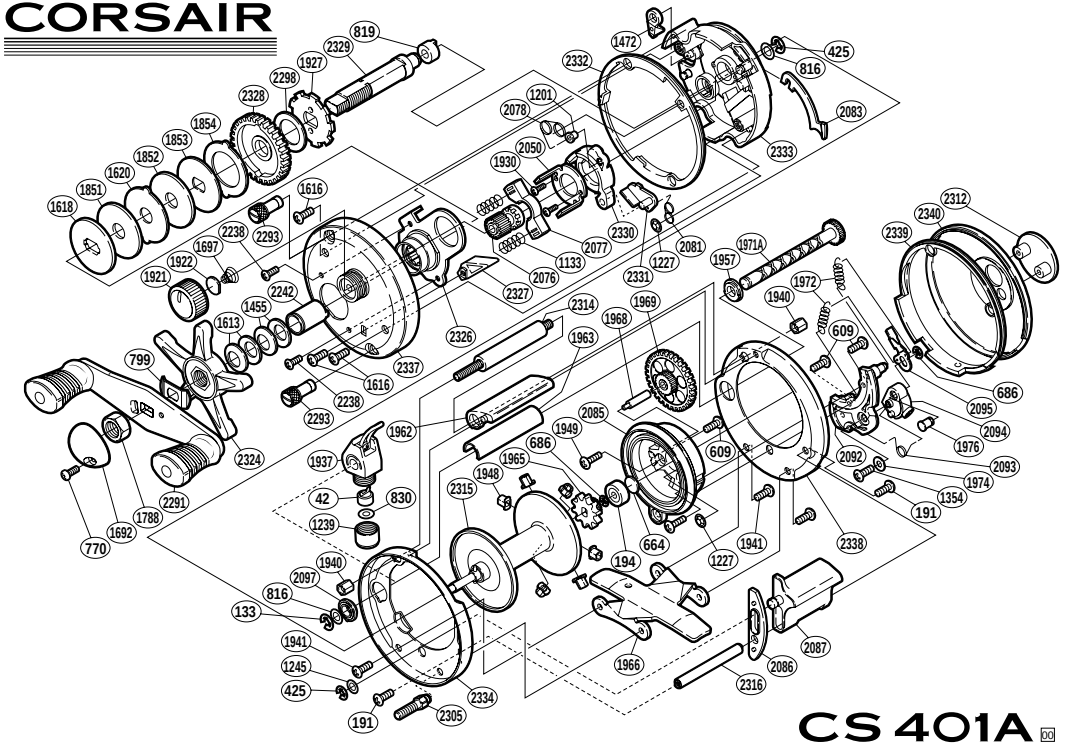

BNT No.	PARTS NAMES	BNT No.	PARTS NAMES	BNT No.	PARTS NAMES
0042	Line Guide Pawl	1853	Key Washer (A)	2087	Quick-Fire II Clutch Bar
0133	“E” Lock	1854	Eared Washer (B-1)	2092	Click Plate
0191	Clutch Bar Support Screw	1921	Cast Control Cap	2093	Click Switch Spring
0194	Ball Bearing	1922	Cast Control Spacer	2094	Click Switch
0425	“E” Lock	1927	Anti-Reverse Ratchet	2095	Click Pawl
0609	Multi-Purpose Screw	1930	Clutch Cam Screw	2097	Worm Bushing (A)
0664	Spacer B	1937	Line Guide Assembly	2238	Bush Plate Screw
0686	“E” Lock	1940	Frame Nut	2242	Roller Clutch Inner Tube
0770	Handle Nut Plate Screw	1941	Stand Screw	2291	Handle Assembly
0799	Friction Washer	1948	Brake Collar	2293	Left Side Plate Nut
0816	Shaft Washer	1949	Right Side Plate Screw	2298	Drive Shaft Washer (B)
0819	Drive Shaft Bushing	1957	Worm Bushing (B)	2305	Stand Bolt
0830	Spacer (optional)	1962	Thumb Rest	2312	Right Side I.D. Plate
1133	Yoke Spring	1963	Level Wind Guard	2314	Frame Bar
1201	Retractor Spring Collar	1965	Idle Gear (A)	2315	Spool Assembly
1227	Push Nut (SPN-2)	1966	Stand	2316	Clutch Bar Support
1239	Pawl Cap	1968	Idle Gear (B) Shaft	2324	Star Drag
1245	Clutch Bar Support Spacer	1969	Idle Gear (B)	2326	Roller Clutch Assembly
1354	Click Switch Screw	1971A	Worm Shaft	2327	Return Pin Guide
1455	Drag Spring Washer (H)	1972	Click Spring	2328	Drive Gear
1472	Anti-Reverse Pawl	1974	Click Switch Washer	2329	Drive Shaft
1613	Drag Spring Washer (L)	1976	Click Shaft	2330	Clutch Cam
1616	Left Side Plate Screw	2050	Clutch Cam Retainer	2331	Clutch Pawl
1618	Key Washer (C)	2076	Pinion Gear	2332	A-Side Seal
1620	Eared Washer	2077	Yoke	2333	Set Plate
1692	Handle Nut Plate	2078	Retractor Spring	2334	Left Side Frame
1697	Spool Tension Spring	2081	Clutch Pawl Spring	2337	Left Side Plate
1788	Handle Nut	2083	Clutch Plate	2338	Right Side Frame
1851	Drag Washer (C)	2085	Brake Case	2339	B-Side Seal
1852	Drag Washer (B-2)	2086	Clutch Bar Guide	2340	Right Side Plate

(120807)

CS 401A