SHIMANO®

NEXAVE

NEX-6000F

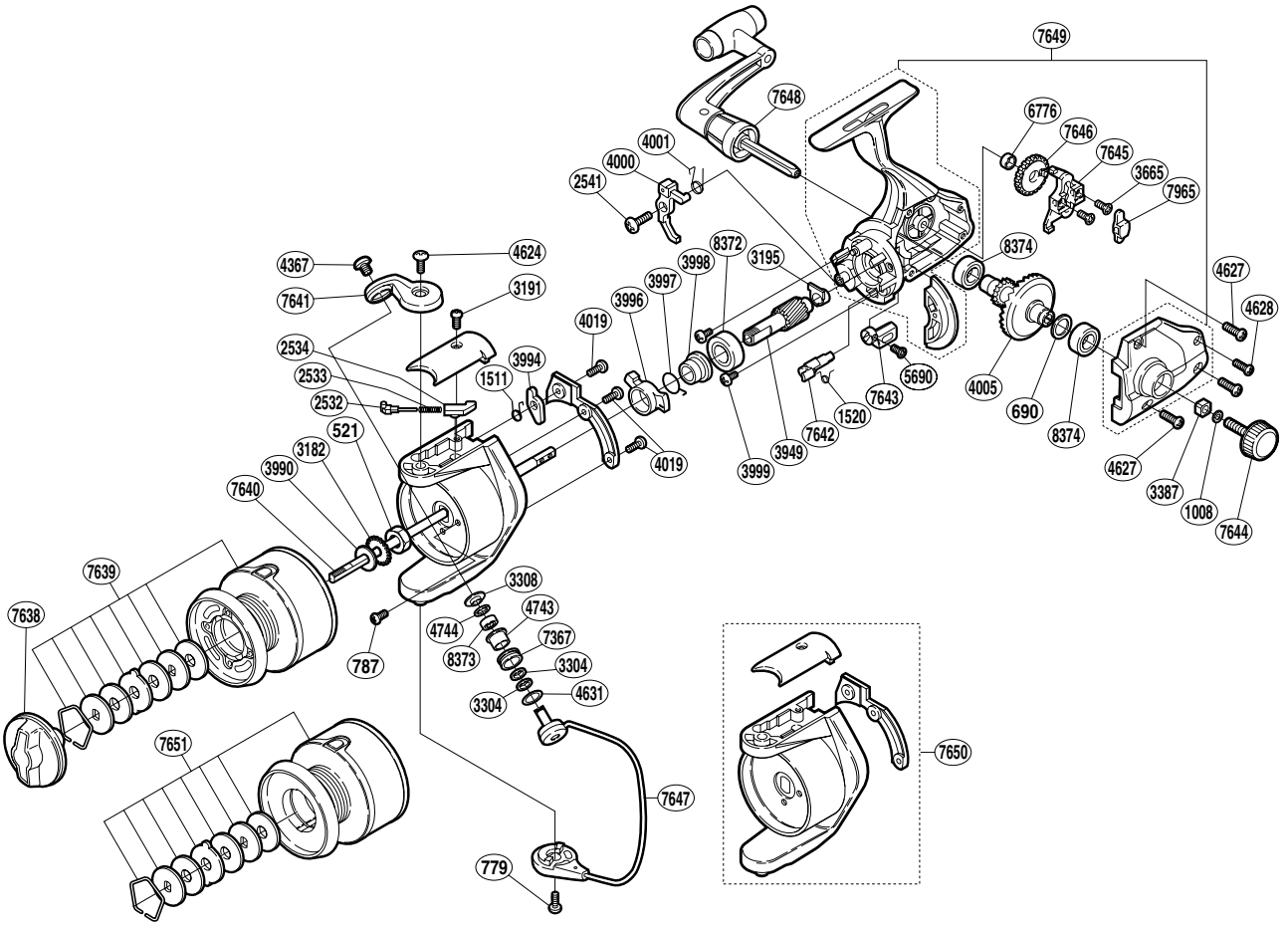

Part No.	Description	Part No.	Description	Part No.	Description
RD 0521	Rotor Nut	RD 3994	Bail Trip Lever	RD 7639	Spool Assembly
RD 0690	Drive Gear Washer	RD 3996	Anti-Reverse Lock Out	RD 7640	Main Shaft
RD 0779	Bail Hold Support Screw	RD 3997	Anti-Reverse Lock Out Spring	RD 7641	Bail Arm
RD 0787	Nut Lock Screw	RD 3998	Lock Out Spring Holder	RD 7642	Anti-Reverse Cam
RD 1008	Handle Lock Washer	RD 3999	Bearing Retainer Screw	RD 7643	Anti-Reverse Lever
RD 1511	Lever Spring	RD 4000	Anti-Reverse Pawl	RD 7644	Handle Screw Cap
RD 1520	Anti-Reverse Cam Spring	RD 4001	Anti-Reverse Pawl Spring	RD 7645	Oscillating Slider
RD 2532	Bail Spring Guide (A)	RD 4005	Drive Gear	RD 7646	Oscillating Gear
RD 2533	Bail Spring	RD 4019	Counterbalance Cover Screw	RD 7647	Bail Assembly
RD 2534	Bail Spring Guide (B)	RD 4367	Line Roller Screw	RD 7648	Handle Assembly
RD 2541	Anti-Reverse Pawl Screw	RD 4624	Bail Arm Screw	RD 7649	Body Assembly
RD 3182	Spool Support	RD 4627	Side Cover Screw (large)	RD 7650	Rotor Assembly
RD 3191	Bail Spring Cover Screw	RD 4628	Side Cover Screw (small)	RD 7965	Oscillating Slider Inner
RD 3195	Bushing	RD 4631	Spacer	RD 8372	Ball Bearing
RD 3304	Bearing Spacer	RD 4743	Line Roller Bushing	RD 8373	Line Roller Bearing
RD 3308	Line Roller Washer	RD 4744	Roller Bearing Seal	RD 8374	Ball Bearing
RD 3387	Handle Screw Lock	RD 5690	Anti-Reverse Lever Screw		
RD 3665	Slider Retainer Screw	RD 6776	Oscillating Gear Bushing		
RD 3949	Pinion Gear	RD 7367	Line Roller		
RD 3990	Spool Washer	RD 7638	Drag Knob Assembly	RD 7651	Spare Spool Assembly