POWER AERO

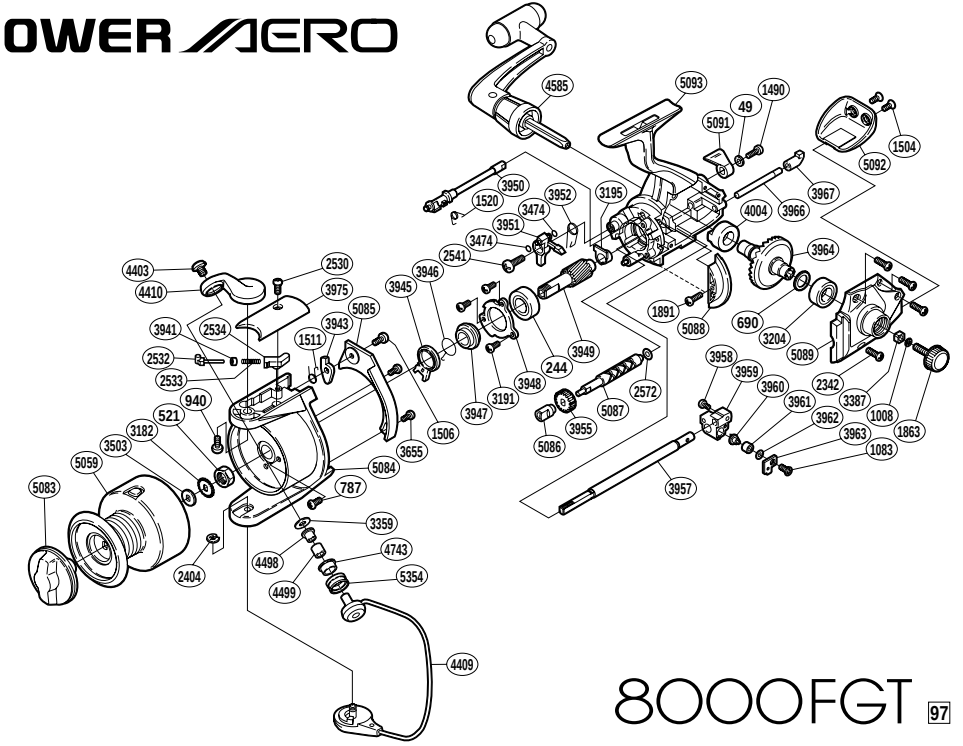

RD No.	PARTS NAMES	RD No.	PARTS NAMES	RD No.	PARTS NAMES
0049	Lock Washer	3195	Bushing	3964	Drive Gear
0244	Ball Bearing	3204	Ball Bearing	3966	Oscillating Guide
0521	Rotor Nut	3359	Line Roller Washer	3967	Oscillating Guide Holder
0690	Drive Gear Washer	3387	Handle Screw Lock	3975	Bail Spring Cover
0787	Nut Lock Screw	3474	“O” Ring	4004	Drive Gear Bushing
0940	Bail Arm Screw	3503	Spool Washer	4403	Line Roller Screw
1008	Handle Lock Washer	3655	Cover Screw	4409	Bail Assembly
1083	Oscillating Pawl Cover Screw	3941	Bail Spring Spacer	4410	Bail Arm
1490	Anti-Reverse Lever Screw	3943	Bail Trip Lever	4498	Line Roller Collar (A)
1504	Rear Protector Screw	3945	Anti-Reverse Lock Out	4499	Line Roller Collar (B)
1506	Bail Trip Lever Screw	3946	Anti-Reverse Lock Out Spring	4585	Handle Assembly
1511	Lever Spring	3947	Lock Out Spring Holder	4743	Line Roller Bushing
1520	Anti-Reverse Cam Spring	3948	Bearing Retainer	5059	Spool Assembly
1863	Handle Screw Cap	3949	Pinion Gear	5083	Drag Knob
1891	Side Cover Flange Screw	3950	Anti-Reverse Cam	5084	Rotor
2342	Side Cover Screw	3951	Anti-Reverse Pawl	5085	Conuterbalance Cover
2404	“E” Lock	3952	Anti-Reverse Pawl Spring	5086	Worm Bearing
2530	Bail Spring Cover Screw	3955	Idle Gear	5087	Worm Shaft
2532	Bail Spring Guide (A)	3957	Main Shaft	5088	Side Cover Flange
2533	Bail Spring	3958	Slider Retainer Screw	5089	Side Cover
2534	Bail Spring Guide (B)	3959	Oscillating Slider	5091	Anti-Reverse Lever
2541	Anti-Reverse Pawl Screw	3960	Oscillating Pawl	5092	Rear Protector
2572	Worm Shaft Spacer (optional)	3961	Oscillating Slider Bushing	5093	Body
3182	Spool Support	3962	Spacer	5354	Line Roller
3191	Bearing Retainer Screw	3963	Oscillating Pawl Cover		

(080913)

8000FGT