SHIMANO

RARENIUM CI4 S A-RB

RARCI4-4000FA

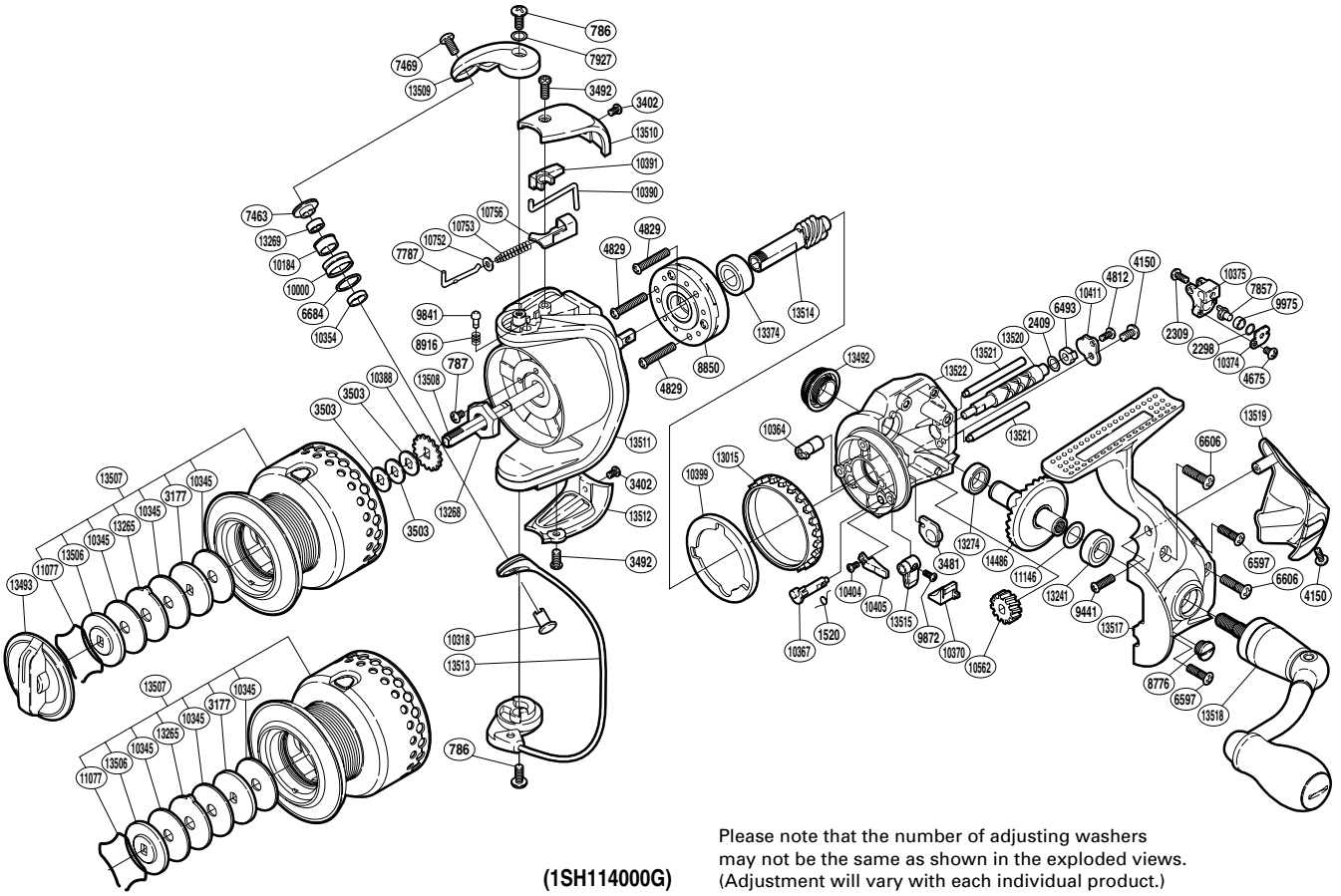

(1SH114000G)

Please note that the number of adjusting washers may not be the same as shown in the exploded views. (Adjustment will vary with each individual product.)

Part No.	Description	Part No.	Description	Part No.	Description
RD 0786	Screw	RD 9442	Screw	RD13015	Friction Ring
RD 0787	Screw	RD 9841	Click Pin	RD13241	Ball Bearing
RD 1520	Anti-Reverse Cam Spring	RD 9872	Screw	RD13265	Eared Washer
RD 2298	Spacer	RD 9975	Oscillating Slider Bushing	RD13268	Rotor Nut
RD 2309	Screw	RD10000	Line Roller	RD13269	Ball Bearing
RD 2409	Spacer	RD10184	Line Roller Bushing	RD13274	Ball Bearing
RD 3177	Key Washer	RD10318	Line Roller Support	RD13374	Ball Bearing
RD 3402	Screw	RD10345	Drag Washer	RD13492	Handle Screw Cap
RD 3481	Bushing	RD10354	Bearing Spacer	RD13493	Drag Knob
RD 3492	Screw	RD10364	Worm Bushing (front)	RD13506	Key Washer
RD 3503	Spool Washer	RD10367	Anti-Reverse Cam	RD13507	Spool Assembly
RD 4150	Screw	RD10370	Anti-Reverse Lever Cover	RD13508	Main Shaft
RD 4675	Screw	RD10374	Oscillating Pawl Cover	RD13509	Bail Arm
RD 4812	Screw	RD10375	Oscillating Slider	RD13510	Bail Spring Cover
RD 4829	Screw	RD10388	Spool Support	RD13511	Rotor
RD 6493	Worm Bushing (rear)	RD10390	Bail Trip Lever	RD13512	Bail Hold Support Guard
RD 6597	Screw	RD10391	Bail Trip Cover	RD13513	Bail Assembly
RD 6606	Screw	RD10399	Friction Ring Collar	RD13514	Pinion Gear
RD 6684	Line Roller Spacer	RD10404	Screw	RD13515	Anti-Reverse Lever
RD 7463	Line Roller Washer	RD10405	Bail Trip Strike	RD13517	Side Cover
RD 7469	Screw	RD10411	Worm Shaft Retainer	RD13518	Handle Assembly
RD 7787	Bail Spring Guide A	RD10562	Idle Gear	RD13519	Rear Protector
RD 7857	Oscillating Pawl	RD10752	Spring Guide A Support	RD13520	Worm Shaft
RD 7927	Washer	RD10753	Bail Spring	RD13521	Oscillating Guide
RD 8776	Oil Cap	RD10756	Bail Spring Seat	RD13522	Body
RD 8850	Roller Clutch Assembly	RD11077	Drag Washers Retainer	RD14486	Drive Gear
RD 8916	Click Spring	RD11146	Washer		