SHIMANO

SEIDO

SED-2500RA

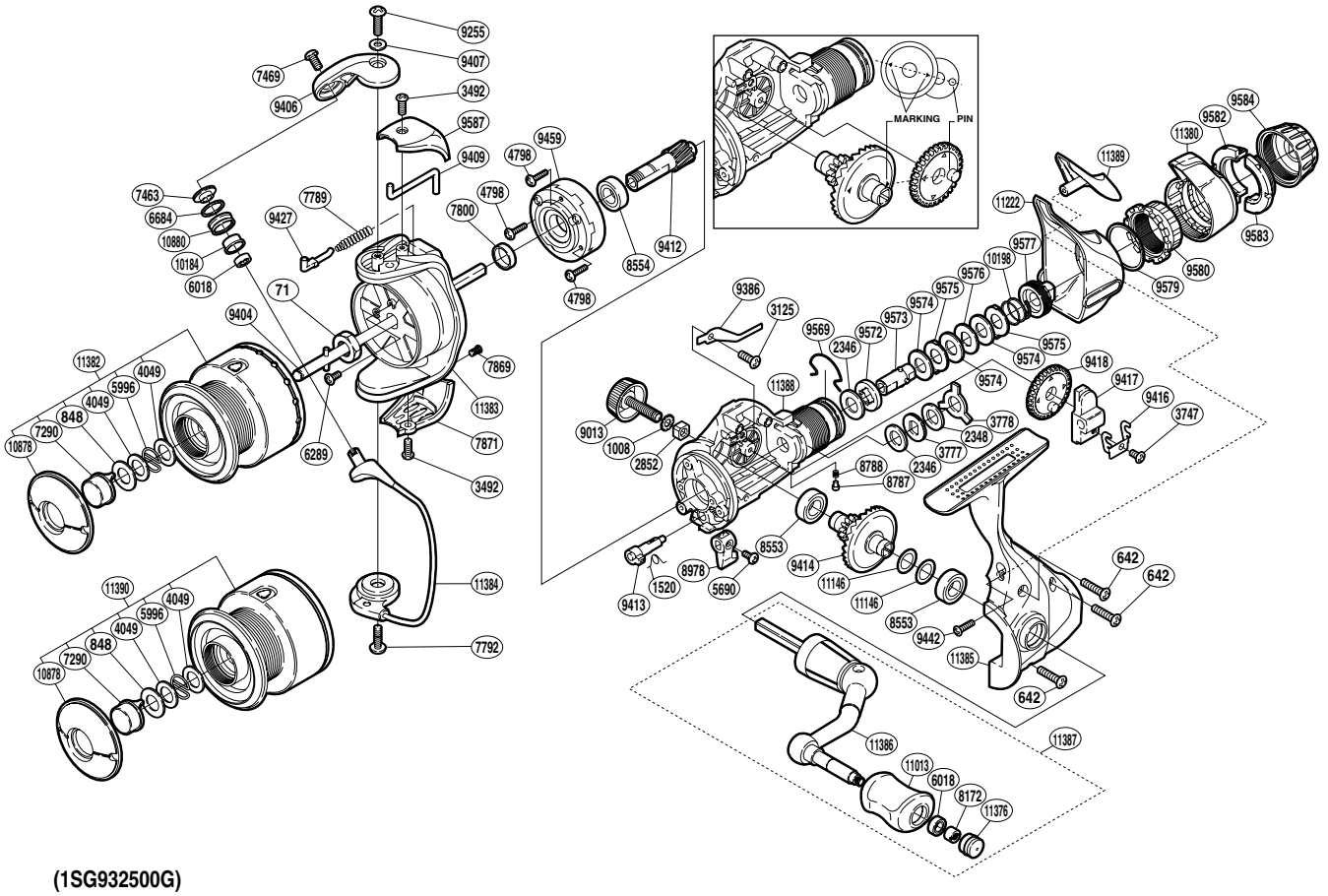

(1SG932500G)

Part No.	Description	Part No.	Description	Part No.	Description
RD 0071	Rotor Nut	RD 8172	Handle Knob Nut	RD 9577	Pressure Screw
RD 0642	Screw	RD 8553	Ball Bearing	RD 9579	Fightin' Pressure Screw Washer
RD 0848	Washer	RD 8554	Ball Bearing	RD 9580	Fightin' Pressure Screw
RD 1008	Handle Lock Washer	RD 8787	Click Pin	RD 9582	Drag Programmer B1
RD 1520	Anti-Reverse Cam Spring	RD 8788	Click Spring	RD 9583	Drag Programmer B2
RD 2346	Drag Washer	RD 8978	Anti-Reverse Lever	RD 9584	Drag Programmer A
RD 2348	Drag Washer	RD 9013	Handle Screw Cap	RD 9587	Bail Spring Cover
RD 2852	Handle Screw Lock	RD 9255	Screw	RD10184	Line Roller Bushing
RD 3125	Screw	RD 9386	Drag Click	RD10198	Drag Coil Spring
RD 3492	Screw	RD 9404	Main Shaft	RD10878	Push Button Collar
RD 3747	Screw	RD 9406	Bail Arm	RD10880	Line Roller
RD 3777	Click Gear	RD 9407	Washer	RD11013	Handle Knob
RD 3778	Eared Washer	RD 9409	Bail Trip Lever	RD11146	Washer
RD 4049	Washer	RD 9412	Pinion Gear	RD11222	Rear Protector B
RD 4798	Screw	RD 9413	Anti-Reverse Cam	RD11376	Handle Knob Seal
RD 5690	Screw	RD 9414	Drive Gear	RD11380	Fightin' Lever
RD 5996	Locking Spring	RD 9416	Oscillating Slider Retainer	RD11382	Spool Assembly
RD 6018	Ball Bearing	RD 9417	Oscillating Slider	RD11383	Rotor
RD 6289	Screw	RD 9418	Oscillating Gear	RD11384	Bail Assembly
RD 6684	Line Roller Spacer	RD 9427	Bail Spring Guide	RD11385	Side Cover
RD 7290	Push Button	RD 9442	Screw	RD11386	Handle Shank Assembly
RD 7463	Line Roller Washer	RD 9459	Roller Clutch Assembly	RD11387	Handle Assembly
RD 7469	Screw	RD 9569	Hold Click Spring	RD11388	Body
RD 7789	Bail Spring	RD 9572	Drag Shaft B	RD11389	Rear Protector A
RD 7792	Screw	RD 9573	Drag Shaft A		
RD 7800	Rotor Ring	RD 9574	Drag Washer		
RD 7869	Screw	RD 9575	Eared Washer		
RD 7871	Bail Hold Support Guard	RD 9576	Key Washer	RD11390	Spare Spool Assembly