SHIMANO

STRADIC

STR-3000SGTMRB

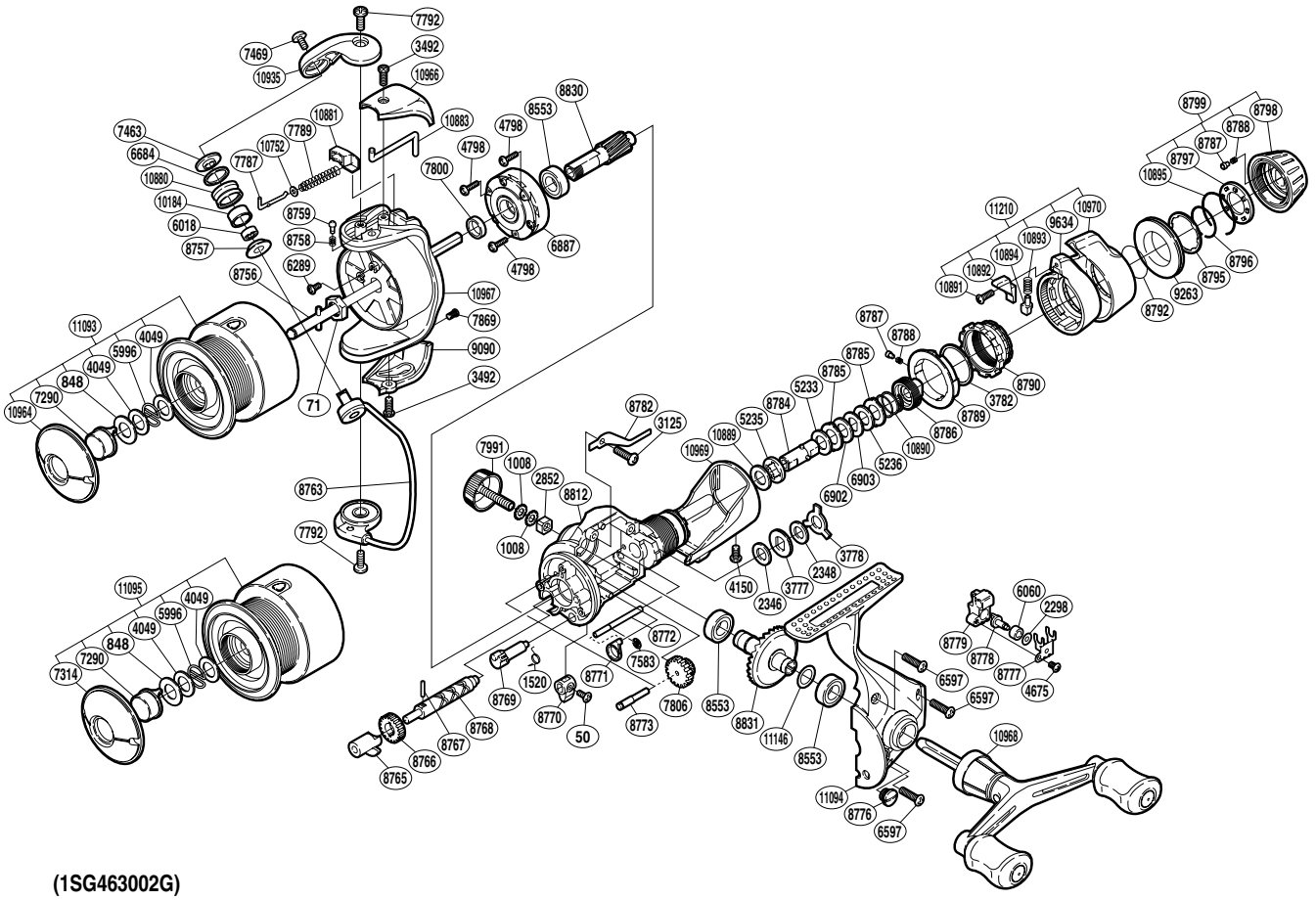

(1SG463002G)

Part No.	Description	Part No.	Description	Part No.	Description
RD 0050	Screw	RD 7792	Screw	RD 8798	Drag Programmer A
RD 0071	Rotor Nut	RD 7800	Rotor Ring	RD 8799	Drag Programmer Assembly
RD 0848	Washer	RD 7806	Idle Gear B	RD 8812	Body
RD 1008	Lock Washer	RD 7869	Screw	RD 8830	Pinion Gear
RD 1520	Anti-Reverse Cam Spring	RD 7991	Handle Screw Cap	RD 8831	Drive Gear
RD 2298	Spacer	RD 8553	Ball Bearing	RD 9090	Bail Hold Support Guard
RD 2346	Drag Washer	RD 8756	Main Shaft	RD 9263	Drag Programmer B
RD 2348	Drag Washer	RD 8757	Bearing Spacer	RD 9634	Fightin' Lever Inner A
RD 2852	Handle Screw Lock	RD 8758	Click Spring	RD10184	Line Roller Bushing
RD 3125	Screw	RD 8759	Click Pin	RD10752	Spring Guide A Support
RD 3492	Screw	RD 8763	Bail Assembly	RD10880	Line Roller
RD 3777	Click Gear	RD 8765	Worm Bushing	RD10881	Bail Spring Seat
RD 3778	Eared Washer	RD 8766	Idle Gear	RD10883	Bail Trip Lever
RD 3782	Fightin' Pressure Screw Washer	RD 8767	Worm Shaft Pin	RD10889	Drag Washer
RD 4049	Washer	RD 8768	Worm Shaft	RD10890	Drag Coil Spring
RD 4150	Screw	RD 8769	Anti-Reverse Cam	RD10891	Screw
RD 4675	Screw	RD 8770	Anti-Reverse Lever	RD10892	Fightin' Lever Inner B
RD 4798	Screw	RD 8771	Oscillating Guide Retainer	RD10893	Position Pin Spring
RD 5233	Drag Washer	RD 8772	Oscillating Guide	RD10894	Lever Position Pin
RD 5235	Drag Shaft B	RD 8773	Idle Gear B Shaft	RD10895	Click Plate Retainer
RD 5236	Drag Washer	RD 8776	Oil Cap	RD10935	Bail Arm
RD 5996	Locking Spring	RD 8777	Oscillating Slider Retainer	RD10964	Push Button Collar
RD 6018	Ball Bearing	RD 8778	Oscillating Pawl	RD10966	Bail Spring Cover
RD 6060	Oscillating Slider Bushing	RD 8779	Oscillating Slider	RD10967	Rotor
RD 6289	Screw	RD 8782	Drag Click	RD10968	Double Paddle Handle Assembly
RD 6597	Screw	RD 8784	Drag Shaft A	RD10969	Rear Protector
RD 6684	Line Roller Spacer	RD 8785	Eared Washer	RD10970	Fightin' Lever Outer
RD 6887	Roller Clutch Assembly	RD 8786	Pressure Screw	RD11093	Spool Assembly
RD 6902	Drag Washer	RD 8787	Click Pin	RD11094	Side Cover
RD 6903	Key Washer	RD 8788	Click Spring	RD11146	Washer
RD 7290	Push Button	RD 8789	Lever Click Gear	RD11210	Fightin' Lever Assembly
RD 7463	Line Roller Washer	RD 8790	Fightin' Pressure Screw		
RD 7469	Screw	RD 8792	Drag Knob Friction Ring		
RD 7583	E Lock	RD 8795	Drag Knob Washer		
RD 7787	Bail Spring Guide A	RD 8796	Drag Knob Retainer	RD 7314	Push Button Collar
RD 7789	Bail Spring	RD 8797	Click Plate	RD11095	Spare Spool Assembly