STRADIC

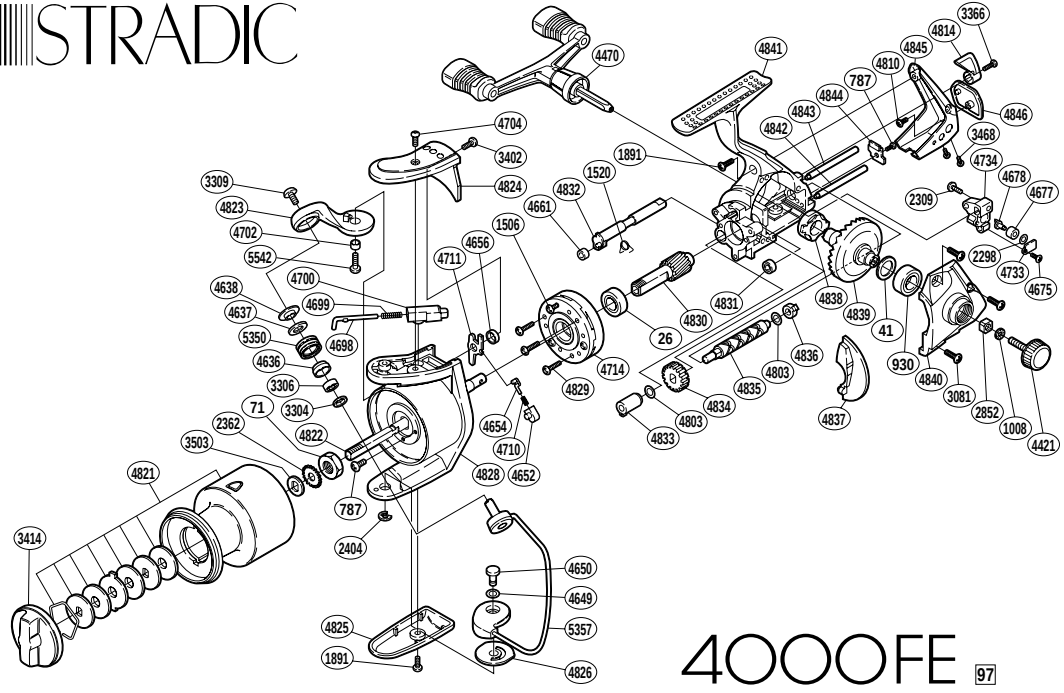

4000FE 97

RD No.	PARTS NAMES	RD No.	PARTS NAMES	RD No.	PARTS NAMES
0026	Ball Bearing	4637	Line Roller Spacer	4823	Bail Arm
0041	Drive Gear Washer	4638	Line Roller Washer	4824	Bail Spring Cover
0071	Rotor Nut	4649	Spacer	4825	Bail Hold Support Guard
0787	Multi-Purpose Screw	4650	Bail Hold Support Shaft	4826	Bail Hold Support Spacer
0930	Ball Bearing	4652	Lever Spring Guide (B)	4828	Rotor
1008	Handle Lock Washer	4654	Lever Spring Guide (A)	4829	Roller Clutch Screw
1506	Clutch Cover Screw	4656	Trip Lever Spacer	4830	Pinion Gear
1520	Anti-Reverse Cam Spring	4661	Anti-Reverse Cam Ring	4831	Ball Bearing
1891	Multi-Purpose Screw	4675	Oscillating Pawl Cover Screw	4832	Anti-Reverse Cam
2298	Spacer	4677	Oscillating Slider Bushing	4833	Worm Bushing (front)
2309	Slider Retainer Screw	4678	Oscillating Pawl	4834	Idle Gear
2362	Spool Support	4698	Bail Spring Guide (A)	4835	Worm Shaft
2404	“E” Lock	4699	Bail Spring	4836	Worm Bushing (rear)
2852	Handle Screw Lock	4700	Bail Spring Guide (B)	4837	Side Cover Flange
3081	Side Cover Screw	4702	Bail Arm Bushing	4838	Drive Gear Bushing
3304	Bearing Spacer	4704	Bail Spring Cover Screw (large)	4839	Drive Gear
3306	Line Roller Bearing	4710	Lever Spring	4840	Side Cover
3309	Line Roller Screw	4711	Bail Trip Lever	4841	Body
3366	Anti-Reverse Lever Screw	4714	Roller Clutch Assembly	4842	Oscillating Guide (A)
3402	Bail Spring Cover Screw (small)	4733	Oscillating Pawl Cover	4843	Oscillating Guide (B)
3414	Drag Knob	4734	Oscillating Slider	4844	Worm Shaft Retainer
3468	Rear Cover Screw (short)	4803	Worm Shaft Spacer	4845	Rear Cover
3503	Spool Washer	4810	Rear Protector Screw	4846	Rear Protector
4421	Handle Screw Cap	4814	Anti-Reverse Lever	5350	Line Roller
4470	Double Paddle Handle Assembly	4821	Spool Assembly	5357	Bail Assembly
4636	Line Roller Bushing	4822	Main Shaft	5542	Bail Arm Screw

(080913)