SHIMANO

STRADIC S A-RB

ST-4000FJ

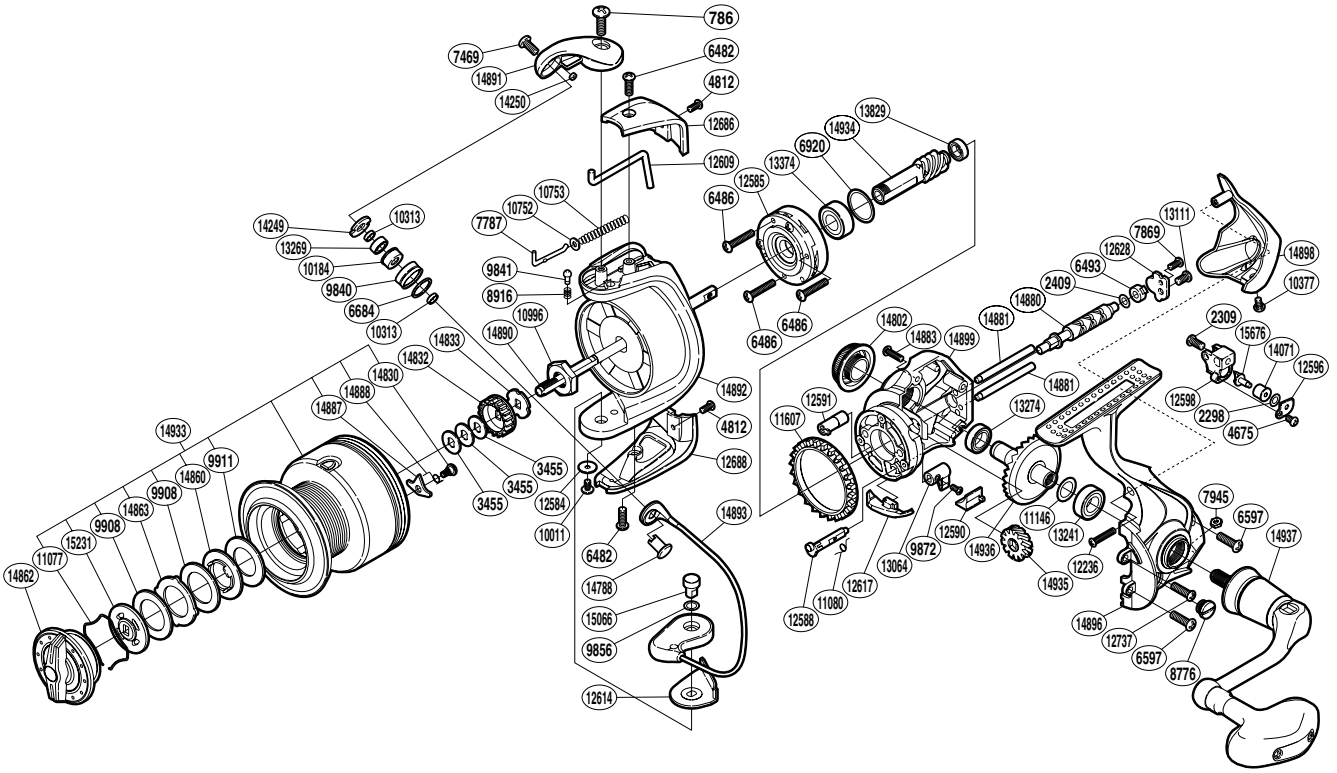

(1SE454010U)

Please note that the number of adjusting washers may not be the same as shown in the exploded views. (Adjustment will vary with each individual product.)

Part No.	Description	Part No.	Description	Part No.	Description
RD 0786	Screw	RD10753	Bail Spring	RD14250	Line Roller Oil Cap
RD 2298	Spacer	RD10996	Rotor Nut	RD14788	Line Roller Support
RD 2309	Screw	RD11077	Drag Washers Retainer	RD14802	Handle Screw Cap
RD 2409	Spacer	RD11080	Anti-Reverse Cam Spring	RD14830	Screw
RD 3455	Spool Washer	RD11146	Washer	RD14832	Spool Support A
RD 4675	Screw	RD11607	Friction Ring	RD14833	Spool Support B
RD 4812	Screw	RD12236	Screw	RD14860	Key Washer
RD 6482	Screw	RD12584	Washer	RD14862	Drag Knob
RD 6486	Screw	RD12585	Roller Clutch Assembly	RD14863	Eared Washer
RD 6493	Worm Bushing (rear)	RD12588	Anti-Reverse Cam	RD14880	Worm Shaft
RD 6597	Screw	RD12590	Anti-Reverse Lever Cover	RD14881	Oscillating Guide
RD 6684	Line Roller Spacer	RD12591	Worm Bushing (front)	RD14883	Screw
RD 6920	Spacer	RD12596	Oscillating Pawl Cover	RD14887	Drag Click
RD 7469	Screw	RD12598	Oscillating Slider	RD14888	Click Spring
RD 7787	Bail Spring Guide A	RD12609	Bail Trip Lever	RD14890	Main Shaft
RD 7869	Screw	RD12614	Bail Hold Support Spacer	RD14891	Bail Arm
RD 7945	Nut	RD12617	Bail Trip Strike	RD14892	Rotor
RD 8776	Oil Cap	RD12628	Worm Shaft Retainer	RD14893	Bail Assembly
RD 8916	Click Spring	RD12686	Bail Spring Cover	RD14896	Side Cover
RD 9840	Line Roller	RD12688	Bail Hold Support Guard	RD14898	Rear Protector
RD 9841	Click Pin	RD12737	Screw	RD14899	Body
RD 9856	Washer	RD13064	Anti-Reverse Lever	RD14933	Spool Assembly
RD 9872	Screw	RD13111	Screw	RD14934	Pinion Gear
RD 9908	Drag Washer	RD13241	Ball Bearing	RD14935	Idle Gear
RD 9911	Drag Washer	RD13269	Ball Bearing	RD14936	Drive Gear
RD10011	Screw	RD13274	Ball Bearing	RD14937	Handle Assembly
RD10184	Line Roller Bushing	RD13374	Ball Bearing	RD15066	Bail Hold Support Shaft
RD10313	Bearing Spacer	RD13829	Ball Bearing	RD15231	Key Washer
RD10377	Screw	RD14071	Oscillating Slider Bushing	RD15676	Oscillating Pawl
RD10752	Bail Spring Guide A Support	RD14249	Line Roller Plate		