SHIMANO®

SUSTAIN A-RB

SA-8000FD

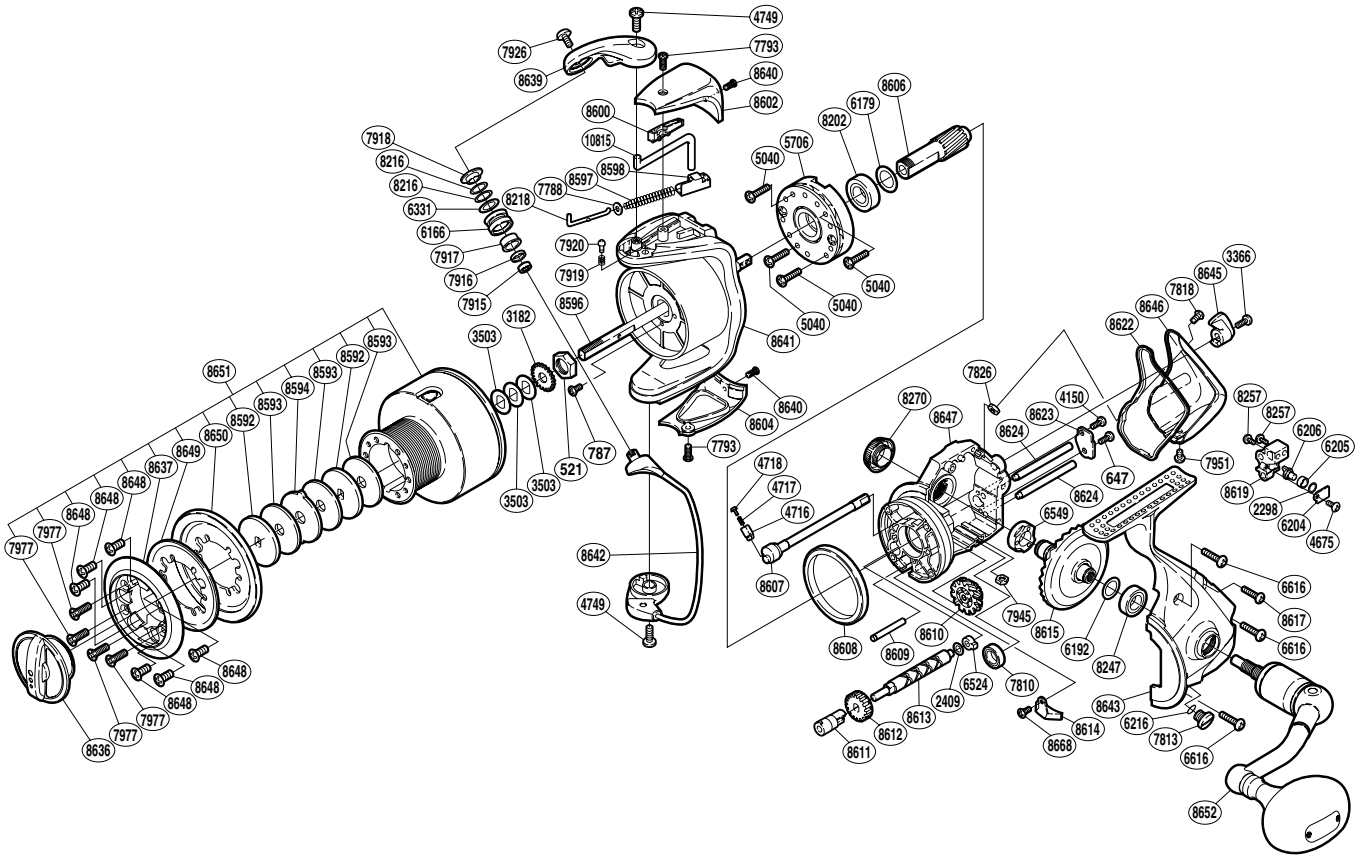

Part No.	Description	Part No.	Description	Part No.	Description
RD 0521	Rotor Nut	RD 7813	Oil Cap	RD 8608	Friction Ring
RD 0647	Worm Shaft Retainer Screw (B)	RD 7818	Rear Protector Screw (C)	RD 8609	Idle Gear (B) Shaft
RD 0787	Nut Lock Screw	RD 7826	Rear Protector Nut (A)	RD 8610	Idle Gear (B)
RD 2298	Spacer	RD 7915	Line Roller Bearing	RD 8611	Worm Bushing (front)
RD 2409	Worm Shaft Spacer	RD 7916	Bearing Spacer	RD 8612	Idle Gear
RD 3182	Spool Support	RD 7917	Line Roller Bushing	RD 8613	Worm Shaft
RD 3366	Anti-Reverse Lever Screw	RD 7918	Line Roller Washer	RD 8614	Bail Trip Strike
RD 3503	Spool Washer	RD 7919	Click Spring	RD 8615	Drive Gear
RD 4150	Worm Shaft Retainer Screw (A)	RD 7920	Click Pin	RD 8617	Side Cover Screw (small)
RD 4675	Oscillating Pawl Cover Screw	RD 7926	Line Roller Screw	RD 8619	Oscillating Slider
RD 4716	Click Spring Guide (B)	RD 7945	Rear Protector Nut (B)	RD 8622	Rear Shield
RD 4717	Click Spring	RD 7951	Rear Protector Screw (D)	RD 8623	Worm Shaft Retainer
RD 4718	Click Spring Guide (A)	RD 7977	Spool Ring Collar Screw	RD 8624	Oscillating Guide
RD 4749	Multi-Purpose Screw	RD 8202	Ball Bearing	RD 8636	Drag Knob
RD 5040	Roller Clutch Screw	RD 8216	Adjusting Washer	RD 8637	Spool Ring Collar
RD 5706	Roller Clutch Assembly	RD 8218	Bail Spring Guide (A)	RD 8639	Bail Arm
RD 6166	Line Roller	RD 8247	Ball Bearing	RD 8640	Protector Screw (B)
RD 6179	Bearing Washer	RD 8257	Slider Retainer Screw	RD 8641	Rotor
RD 6192	Drive Gear Washer	RD 8270	Handle Screw Cap	RD 8642	Bail Assembly
RD 6204	Oscillating Pawl Cover	RD 8592	Key Washer	RD 8643	Side Cover
RD 6205	Oscillating Slider Bushing	RD 8593	Drag Washer	RD 8645	Anti-Reverse Lever
RD 6206	Oscillating Pawl	RD 8594	Eared Washer	RD 8646	Rear Protector
RD 6216	“O” Ring	RD 8596	Main Shaft	RD 8647	Body
RD 6331	Line Roller Spacer	RD 8597	Bail Spring	RD 8648	Spool Ring Screw
RD 6524	Worm Bushing (rear)	RD 8598	Bail Spring Seat	RD 8649	Spool Ring Collar Spacer
RD 6549	Drive Gear Bushing	RD 8600	Bail Trip Cover	RD 8650	Spool Ring
RD 6616	Side Cover Screw (large)	RD 8602	Bail Spring Cover	RD 8651	Spool Assembly
RD 7788	Spring Guide (A) Support	RD 8604	Bail Hold Support Guard	RD 8652	Handle Assembly
RD 7793	Protector Screw (A)	RD 8606	Pinion Gear	RD 8668	Bail Trip Strike Screw
RD 7810	Ball Bearing	RD 8607	Anti-Reverse Cam	RD10815	Bail Trip Lever

(180114)