SYMETRE

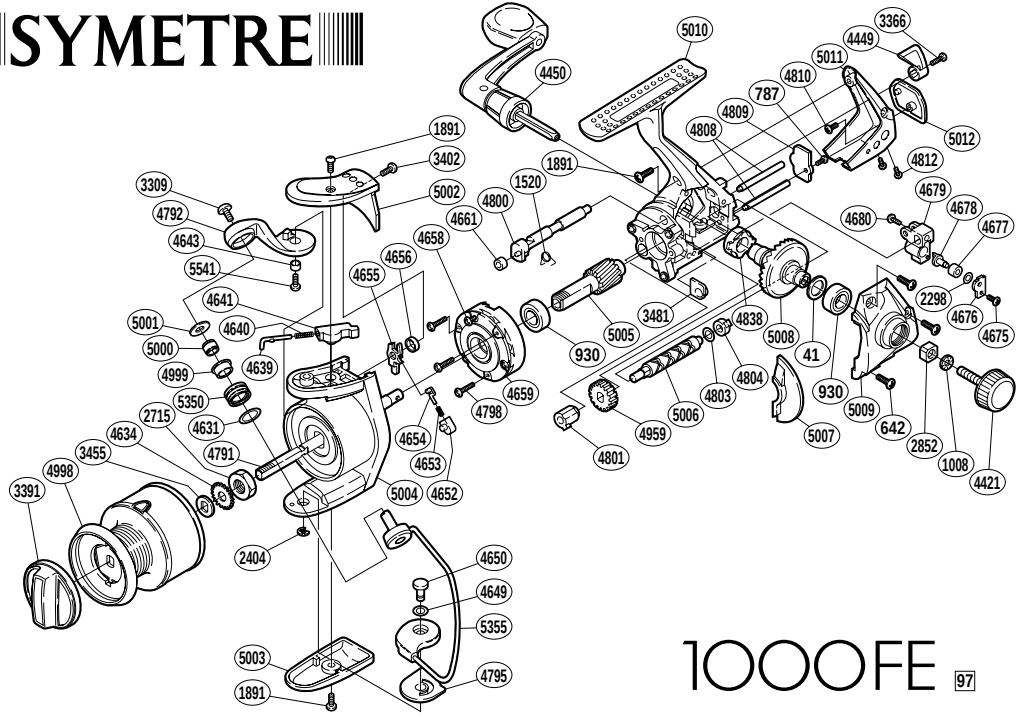

1000FE 97

RD No.	PARTS NAMES	RD No.	PARTS NAMES	RD No.	PARTS NAMES
0041	Drive Gear Washer	4643	Bail Arm Bushing	4808	Oscillating Guide
0642	Side Cover Screw	4649	Spacer	4809	Worm Shaft Retainer
0787	Worm Shaft Retainer Screw	4650	Bail Hold Support Shaft	4810	Rear Protector Screw
0930	Ball Bearing	4652	Lever Spring Guide (B)	4812	Rear Cover Screw (small)
1008	Handle Lock Washer	4653	Lever Spring	4838	Drive Gear Bushing
1520	Anti-Reverse Cam Spring	4654	Lever Spring Guide (A)	4959	Idle Gear
1891	Multi-Purpose Screw	4655	Bail Trip Lever	4998	Spool Assembly
2298	Spacer	4656	Trip Lever Spacer	4999	Line Roller Bushing
2404	“E” Lock	4658	Clutch Cover Screw	5000	Line Roller Collar
2715	Rotor Nut	4659	Roller Clutch Assembly	5001	Line Roller Washer
2852	Handle Screw Lock	4661	Anti-Reverse Cam Ring	5002	Bail Spring Cover
3309	Line Roller Screw	4675	Oscillating Pawl Cover Screw	5003	Bail Hold Support Guard
3366	Anti-Reverse Lever Screw	4676	Oscillating Pawl Cover	5004	Rotor
3391	Drag Knob	4677	Oscillating Slider Bushing	5005	Pinion Gear
3402	Bail Spring Cover Screw (small)	4678	Oscillating Pawl	5006	Worm Shaft
3455	Spool Washer	4679	Oscillating Slider	5007	Side Cover Flange
3481	Bushing	4680	Slider Retainer Screw	5008	Drive Gear
4421	Handle Screw Cap	4791	Main Shaft	5009	Side Cover
4449	Anti-Reverse Lever	4792	Bail Arm	5010	Body
4450	Handle Assembly	4795	Bail Hold Support Spacer	5011	Rear Cover
4631	Spacer	4798	Roller Clutch Screw	5012	Rear Protector
4634	Spool Support	4800	Anti-Reverse Cam	5350	Line Roller
4639	Bail Spring Guide (A)	4801	Worm Bushing (front)	5355	Bail Assembly
4640	Bail Spring	4803	Worm Shaft Spacer	5541	Bail Arm Screw
4641	Bail Spring Guide (B)	4804	Worm Bushing (rear)		

(080913)