SYMETRE

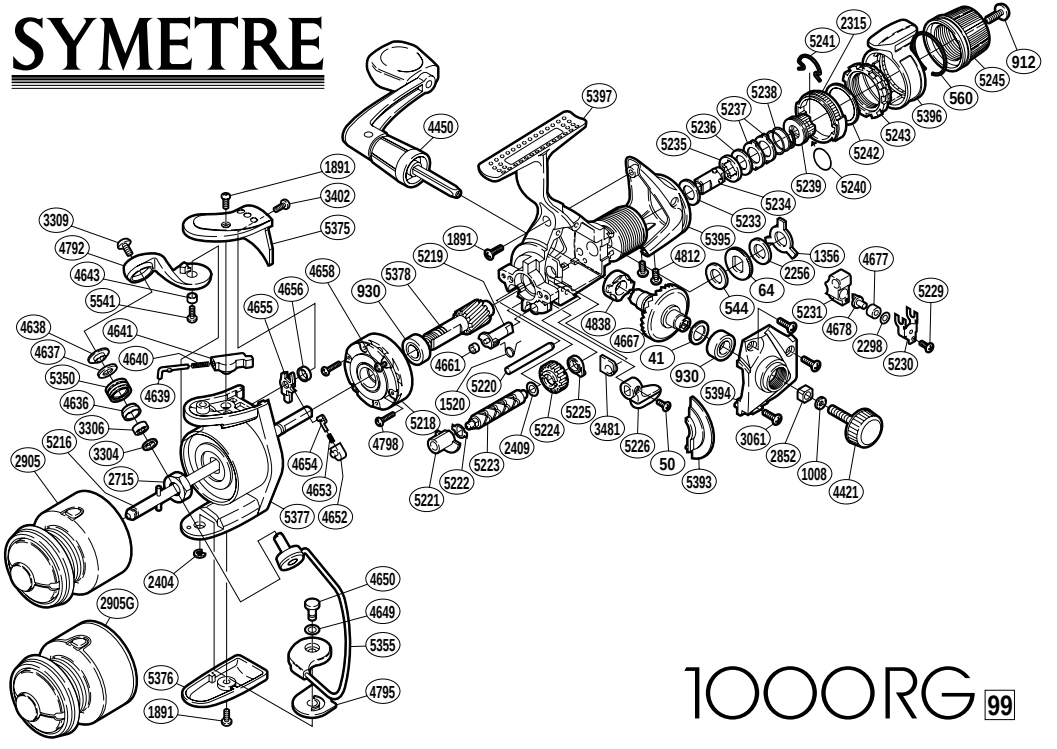

RD No.	PARTS NAMES	RD No.	PARTS NAMES	RD No.	PARTS NAMES
0041	Drive Gear Washer	4638	Line Roller Washer	5225	Oscillating Guide Retainer
0050	Anti-Reverse Lever Screw	4639	Bail Spring Guide (A)	5226	Anti-Reverse Lever
0064	Click Gear	4640	Bail Spring	5229	Slider Retainer Screw
0544	Drag Washer “C” (cloth)	4641	Bail Spring Guide (B)	5230	Oscillating Slider Retainer
0560	Lever Hold Spring	4643	Bail Arm Bushing	5231	Oscillating Slider
0912	Drag Programmer Screw	4649	Spacer	5233	Drag Washer “H” (cloth)
0930	Ball Bearing	4650	Bail Hold Support Shaft	5234	Drag Shaft (A)
1008	Handle Lock Washer	4652	Lever Spring Guide (B)	5235	Drag Shaft (B)
1356	Eared Washer “BF”	4653	Lever Spring	5236	Drag Washer “H” (white plastics)
1520	Anti-Reverse Cam Spring	4654	Lever Spring Guide (A)	5237	Eared Washer “B”
1891	Multi-Purpose Screw	4655	Bail Trip Lever	5238	Drag Coil Spring
2256	Drag Washer “C” (blue)	4656	Trip Lever Spacer	5239	Pressure Screw
2298	Spacer	4658	Clutch Cover Screw	5240	“O” Ring
2315	Lever Click Gear	4661	Anti-Reverse Cam Ring	5241	Hold Click Spring
2404	“E” Lock	4667	Drive Gear	5242	Fightin’ Pressure Screw Washer
2409	Worm Shaft Spacer	4677	Oscillating Slider Bushing	5243	Fightin’ Pressure Screw
2715	Rotor Nut	4678	Oscillating Pawl	5245	Drag Programmer
2852	Handle Screw Lock	4792	Bail Arm	5350	Line Roller
2905	Spool Assembly (aluminum)	4795	Bail Hold Support Spacer	5355	Bail Assembly
2905G	Spool Assembly (graphite)	4798	Roller Clutch Screw	5375	Bail Spring Cover
3061	Side Cover Screw	4812	Rear Cover Screw (small)	5376	Bail Hold Support Guard
3304	Bearing Spacer	4838	Drive Gear Bushing	5377	Rotor
3306	Line Roller Bearing	5216	Main Shaft	5378	Pinion Gear
3309	Line Roller Screw	5218	Roller Clutch Assembly	5393	Side Cover Flange
3402	Bail Spring Cover Screw (small)	5219	Anti-Reverse Cam	5394	Side Cover
3481	Bushing	5220	Oscillating Guide	5395	Rear Cover
4421	Handle Screw Cap	5221	Worm Bushing	5396	Fightin’ Drag II Lever
4450	Handle Assembly	5222	Idle Gear Lock	5397	Body
4636	Line Roller Bushing	5223	Worm Shaft	5541	Bail Arm Screw
4637	Line Roller Spacer	5224	Idle Gear		

(100828)

1000RG