SAHARA

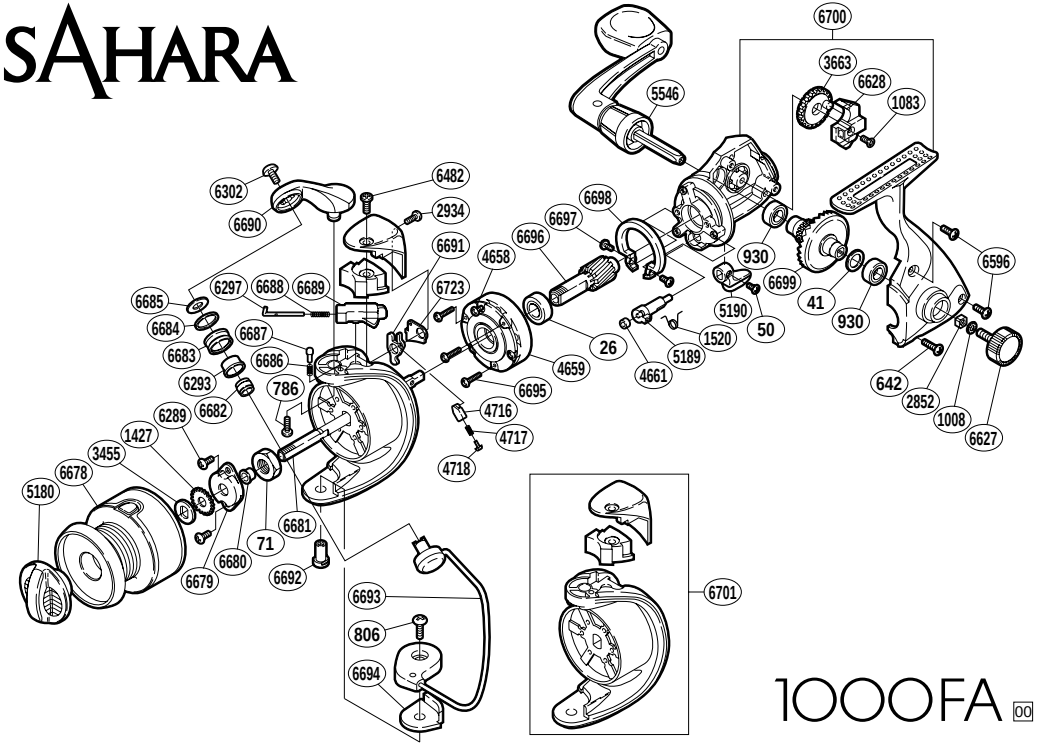

RD No.	PARTS NAMES	RD No.	PARTS NAMES	RD No.	PARTS NAMES
0026	Ball Bearing	4717	Lever Spring	6684	Line Roller Spacer
0041	Drive Gear Washer	4718	Lever Spring Guide (A)	6685	Line Roller Washer
0050	Anti-Reverse Lever Screw	5180	Drag Knob	6686	Click Spring
0071	Rotor Nut	5189	Anti-Reverse Cam	6687	Bail Arm Click
0642	Side Cover Screw (long)	5190	Anti-Reverse Lever	6688	Bail Spring
0786	Bail Arm Screw	5546	Handle Assembly	6689	Bail Spring Guide (B)
0806	Bail Hold Support Screw	6289	Nut Retainer Screw	6690	Bail Arm
0930	Ball Bearing	6293	Line Roller Bushing	6691	Bail Trip Lever
1008	Handle Lock Washer	6297	Bail Spring Guide (A)	6692	Bail Hold Support Shaft
1083	Slider Retainer Screw	6302	Line Roller Screw	6693	Bail Assembly
1427	Spool Support	6482	Rotor Protector Screw (large)	6694	Bail Hold Support Spacer
1520	Anti-Reverse Cam Spring	6596	Side Cover Screw (short)	6695	Roller Clutch Screw
2852	Handle Screw Lock	6627	Handle Screw Cap	6696	Pinion Gear
2934	Rotor Protector Screw (small)	6628	Oscillating Slider	6697	Friction Ring Screw
3455	Spool Washer	6678	Spool Assembly	6698	Friction Ring
3663	Oscillating Gear	6679	Nut Retainer	6699	Drive Gear
4658	Clutch Cover Screw	6680	Rotor Support Bushing	6700	Body Assembly
4659	Roller Clutch Assembly	6681	Main Shaft	6701	Rotor Assembly
4661	Anti-Reverse Cam Ring	6682	Line Roller Collar	6723	Bail Trip Lever Washer
4716	Lever Spring Guide (B)	6683	Line Roller		

(120711)

1000FA 00