SHIMANO

TALICA S A-RB

TAC-50II

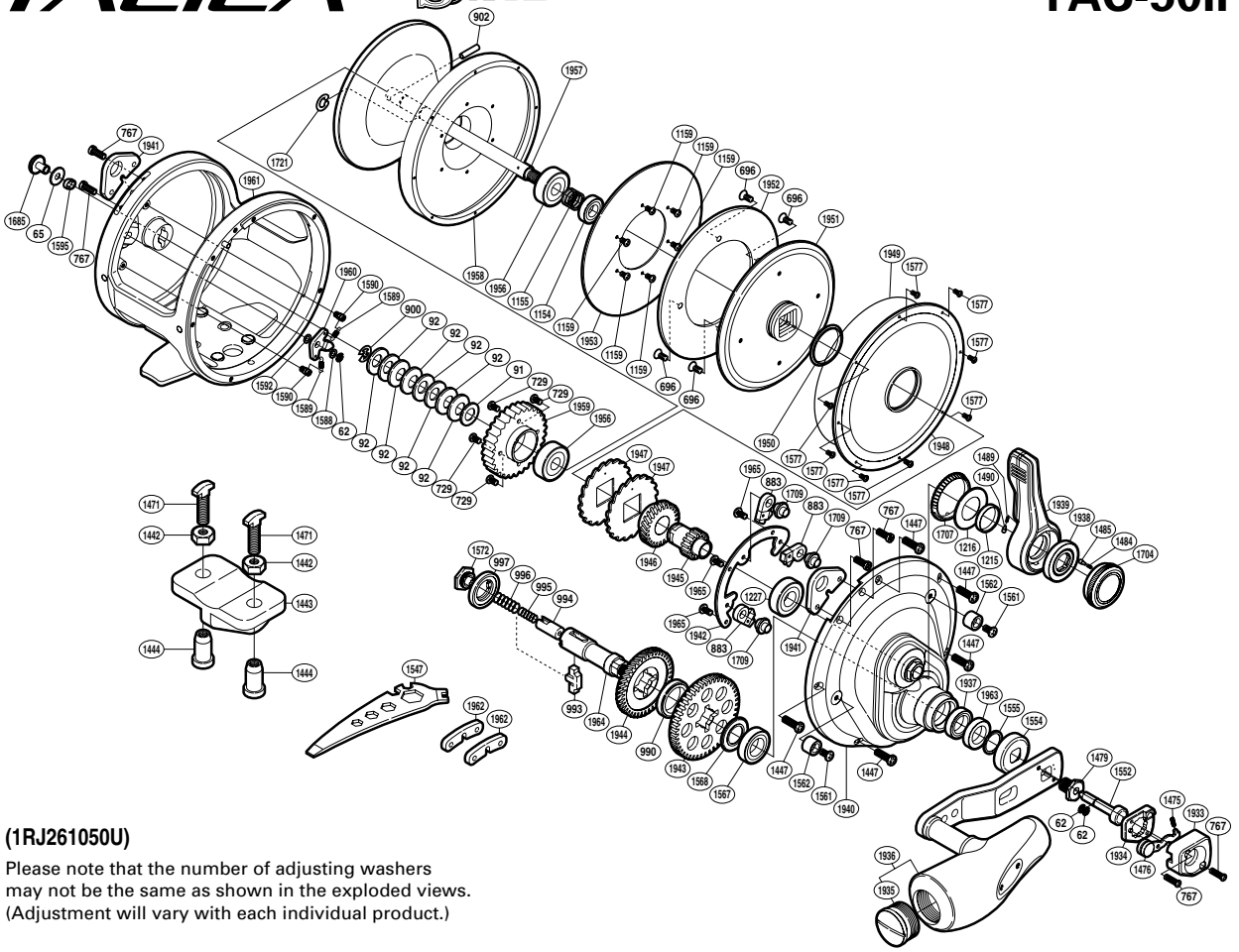

(1RJ261050U)

Please note that the number of adjusting washers may not be the same as shown in the exploded views. (Adjustment will vary with each individual product.)

Part No.	Description	Part No.	Description	Part No.	Description
TGT0062	E Lock	TGT1554	Drive Shaft Shield	TGT1944	Drive Gear B
TGT0065	Spacer	TGT1555	Washer	TGT1945	Pinion Gear A
TGT0091	Bearing Thrust Washer	TGT1561	Screw	TGT1946	Pinion Gear B
TGT0092	Coned Disc Spring	TGT1562	Bolt Shield	TGT1947	Anti-Reverse Ratchet
TGT0696	Screw	TGT1567	Ball Bearing	TGT1948	Cooling Shield
TGT0729	Screw	TGT1568	Drive Gear Washer	TGT1949	O Ring
TGT0767	Screw	TGT1572	Drive Shaft Screw	TGT1950	Waterproof Ring
TGT0883	Anti-Reverse Pawl	TGT1577	Screw	TGT1951	Pinion Guard
TGT0900	E Lock	TGT1588	Spacer	TGT1952	Drag Plate
TGT0902	Cross Pin	TGT1589	Click Pawl Spring	TGT1953	Drag Washer
TGT0990	Friction Washer	TGT1590	Click Spring Shaft	TGT1954	Ball Bearing
TGT0993	Gear Select Cross Bar	TGT1592	Spacer	TGT1955	Pressure Plate Spring
TGT0994	Cross Bar Stop	TGT1595	Click Switch Cam	TGT1956	Ball Bearing
TGT0995	Drive Shaft Spring B	TGT1685	Click Button	TGT1957	Spool Shaft
TGT0996	Drive Shaft Spring	TGT1704	Pre-Program Dial	TGT1958	Spool
TGT0997	Friction Washer	TGT1707	Lever Click Gear	TGT1959	Click Gear
TGT1159	Screw	TGT1709	Anti-Reverse Pawl Pin	TGT1960	Click Pawl
TGT1215	Lever Thrust Ring	TGT1721	C Lock	TGT1961	One-Piece Frame
TGT1216	Washer	TGT1933	Push Button Shield	TGT1963	Drive Gear Bushing
TGT1227	Ball Bearing	TGT1934	Handle Bolt Plate	TGT1964	Drive Shaft
TGT1447	Screw	TGT1935	Handle Knob Bushing	TGT1965	Screw
TGT1475	Slide Plate Spring	TGT1936	Handle Assembly		
TGT1476	Slide Plate	TGT1937	Ball Bearing	TGT1442	Rod Clamp Nut B (accessory)
TGT1479	Handle Bolt	TGT1938	Lever Shaft Body	TGT1443	Rod Clamp (accessory)
TGT1484	Click Spring	TGT1939	Drag Control Lever	TGT1444	Rod Clamp Nut A (accessory)
TGT1485	Click Pin	TGT1940	Right Side Plate	TGT1471	Rod Clamp Bolt (accessory)
TGT1489	Lever Click Shoe	TGT1941	Harness Lug		
TGT1490	Lever Click	TGT1942	Anti-Reverse Pawl Keeper	TGT1547	Wrench (accessory)
TGT1552	Push Low Button Shaft	TGT1943	Drive Gear A	TGT1962	Harness Lug Plug (accessory)

(230725)