# TWIN POWER XT

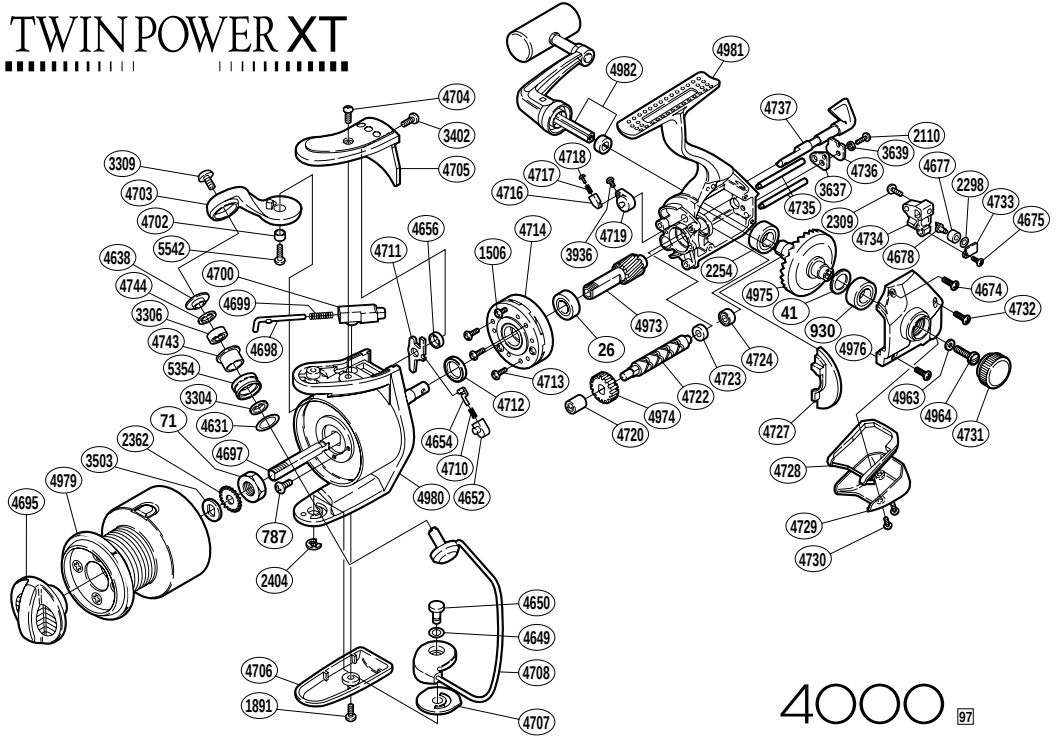


| RD No. | PARTS NAMES | RD No. | PARTS NAMES | RD No. | PARTS NAMES |
|---|---|---|---|---|---|
| 0026 | Ball Bearing | 4674 | Side Cover Screw (short) | 4724 | Ball Bearing |
| 0041 | Drive Gear Washer | 4675 | Oscillating Pawl Cover Screw | 4727 | Side Cover Flange |
| 0071 | Rotor Nut | 4677 | Oscillating Slider Bushing | 4728 | Rear Shield |
| 0787 | Nut Lock Screw | 4678 | Oscillating Pawl | 4729 | Rear Protector |
| 0930 | Ball Bearing | 4695 | Drag Knob | 4730 | Rear Protector Screw |
| 1506 | Clutch Cover Screw | 4697 | Main Shaft | 4731 | Handle Screw Cap |
| 1891 | Guard Screw | 4698 | Bail Spring Guide (A) | 4732 | Side Cover Screw (long) |
| 2110 | Worm Shaft Retainer Screw | 4699 | Bail Spring | 4733 | Oscillating Pawl Cover |
| 2254 | Ball Bearing | 4700 | Bail Spring Guide (B) | 4734 | Oscillating Slider |
| 2298 | Spacer | 4702 | Bail Arm Bushing | 4735 | Oscillating Guide |
| 2309 | Slider Retainer Screw | 4703 | Bail Arm | 4736 | Worm Shaft Retainer |
| 2362 | Spool Support | 4704 | Bail Spring Cover Screw (large) | 4737 | Anti-Reverse Lever |
| 2404 | “E” Lock | 4705 | Bail Spring Cover | 4743 | Line Roller Bushing |
| 3304 | Bearing Spacer | 4706 | Bail Hold Support Guard | 4744 | Roller Bearing Seal |
| 3306 | Line Roller Bearing | 4707 | Bail Hold Support Spacer | 4963 | Handle Lock Washer |
| 3309 | Line Roller Screw | 4708 | Bail Assembly | 4964 | Handle Lock Screw |
| 3402 | Bail Spring Cover Screw (small) | 4710 | Lever Spring | 4973 | Pinion Gear |
| 3503 | Spool Washer | 4711 | Bail Trip Lever | 4974 | Idle Gear |
| 3637 | Worm Shaft Retainer Washer | 4712 | Rotor Spacer | 4975 | Drive Gear |
| 3639 | Worm Shaft Retainer Spacer | 4713 | Roller Clutch Screw | 4976 | Side Cover |
| 3936 | Anti-Reverse Cam Screw | 4714 | Roller Clutch Assembly | 4979 | Spool Assembly |
| 4631 | Spacer | 4716 | Lever Spring Guide (B) | 4980 | Rotor |
| 4638 | Line Roller Washer | 4717 | Lever Spring | 4981 | Body |
| 4649 | Spacer | 4718 | Lever Spring Guide (A) | 4982 | Handle Assembly |
| 4650 | Bail Hold Support Shaft | 4719 | Anti-Reverse Cam | 5354 | Line Roller |
| 4652 | Lever Spring Guide (B) | 4720 | Worm Bushing (front) | 5542 | Bail Arm Screw |
| 4654 | Lever Spring Guide (A) | 4722 | Worm Shaft | | |
| 4656 | Trip Lever Spacer | 4723 | Worm Bushing (rear) | | |

(080913)

4000