SHIMANO

TWIN POWER A-RB

TP-5000FB

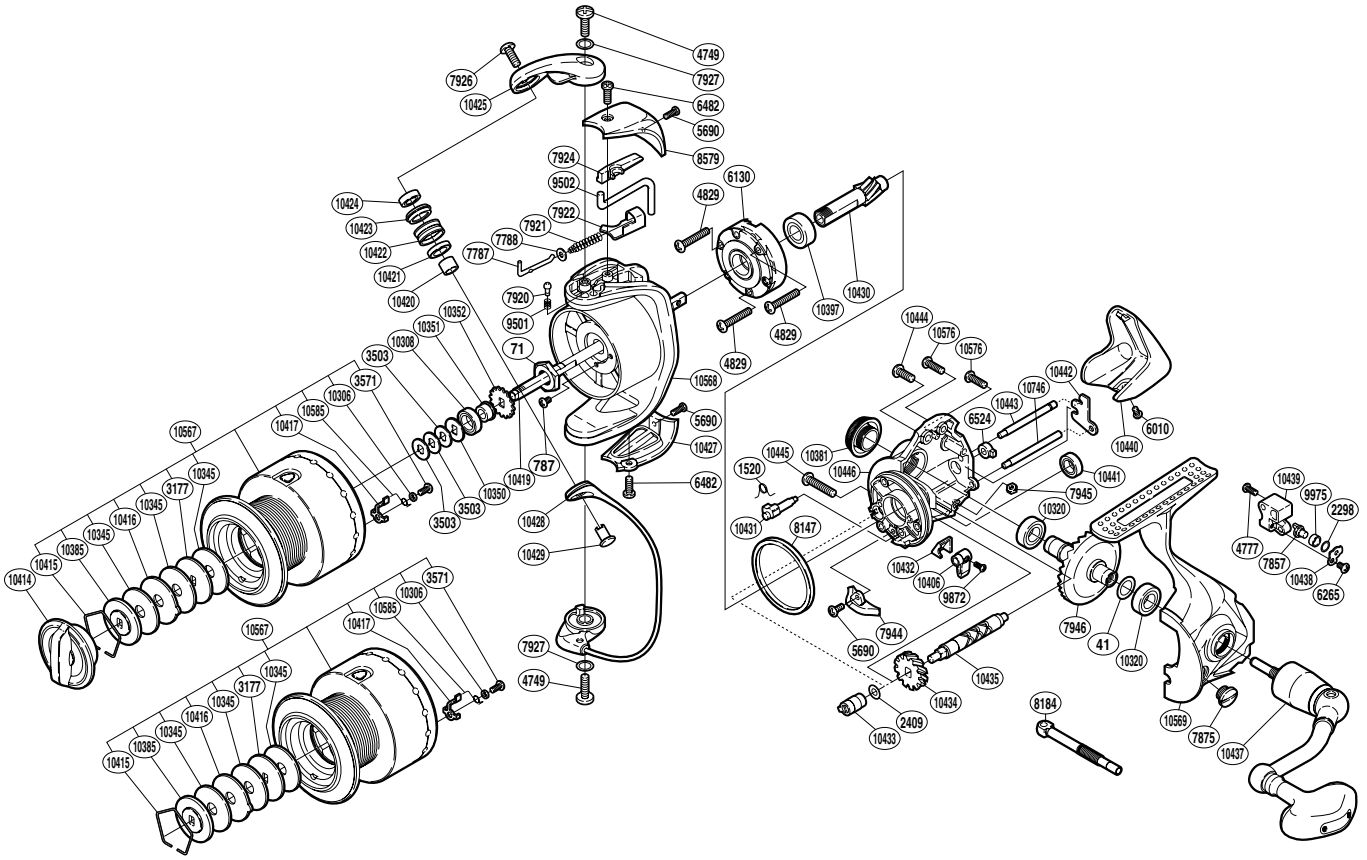

(1SG385002G)

Part No.	Description	Part No.	Description	Part No.	Description
RD 0041	Washer	RD 7945	Nut	RD10425	Bail Arm
RD 0071	Rotor Nut	RD 7946	Drive Gear	RD10427	Bail Hold Support Guard
RD 0787	Screw	RD 8147	Friction Ring	RD10428	Bail Assembly
RD 1520	Anti-Reverse Cam Spring	RD 8579	Bail Spring Cover	RD10429	Line Roller Support
RD 2298	Spacer	RD 9501	Click Spring	RD10430	Pinion Gear
RD 2409	Spacer	RD 9502	Bail Trip Lever	RD10431	Anti-Reverse Cam
RD 3177	Key Washer	RD 9872	Screw	RD10432	Anti-Reverse Lever Cover
RD 3503	Spool Washer	RD 9975	Oscillating Slider Bushing	RD10433	Worm Bushing (front)
RD 3571	Screw	RD10306	Drag Click Collar	RD10434	Idle Gear
RD 4749	Screw	RD10308	Ball Bearing	RD10435	Worm Shaft
RD 4777	Screw	RD10320	Ball Bearing	RD10437	Handle Assembly
RD 4829	Screw	RD10345	Drag Washer	RD10438	Oscillating Pawl Cover
RD 5690	Screw	RD10350	Spool Support B	RD10439	Oscillating Slider
RD 6010	Screw	RD10351	Bearing Bushing	RD10440	Rear Protector
RD 6130	Roller Clutch Assembly	RD10352	Spool Support	RD10441	Ball Bearing
RD 6265	Screw	RD10381	Handle Screw Cap	RD10442	Worm Shaft Retainer
RD 6482	Screw	RD10385	Key Washer	RD10443	Oscillating Guide
RD 6524	Worm Bushing (rear)	RD10397	Ball Bearing	RD10444	Screw
RD 7787	Bail Spring Guide A	RD10406	Anti-Reverse Lever	RD10445	Screw
RD 7788	Spring Guide A Support	RD10414	Drag Knob	RD10446	Body
RD 7857	Oscillating Pawl	RD10415	Drag Washers Retainer	RD10567	Spool Assembly
RD 7875	Oil Cap	RD10416	Eared Washer	RD10568	Rotor
RD 7920	Click Pin	RD10417	Drag Click	RD10569	Side Cover
RD 7921	Bail Spring	RD10419	Main Shaft	RD10576	Screw
RD 7922	Bail Spring Seat	RD10420	Bearing Spacer	RD10585	Click Spring
RD 7924	Bail Trip Cover	RD10421	Line Roller Collar	RD10746	Oscillating Guide B
RD 7926	Screw	RD10422	Line Roller		
RD 7927	Washer	RD10423	Line Roller Bushing		
RD 7944	Bail Trip Strike	RD10424	Ball Bearing	RD 8184	Handle Shaft (right)

(181030)