SHIMANO

TWIN POWER S A-RB

TP-6000FC

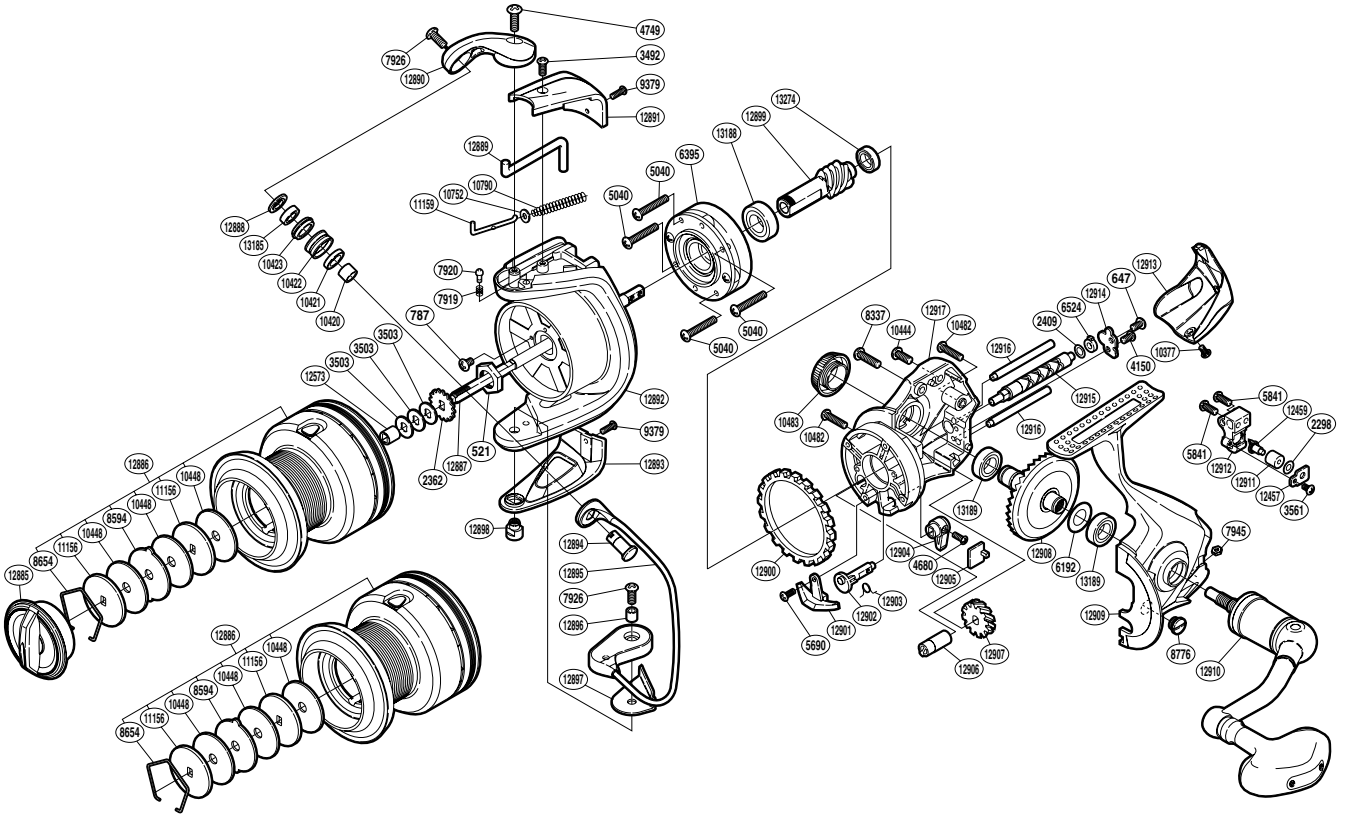

(1SG386004G)

Please note that the number of adjusting washers may not be the same as shown in the exploded views. (Adjustment will vary with each individual product.)

Part No.	Description	Part No.	Description	Part No.	Description
RD 0521	Rotor Nut	RD10377	Screw	RD12896	Screw Collar
RD 0647	Screw	RD10420	Bearing Spacer	RD12897	Bail Hold Support Spacer
RD 0787	Screw	RD10421	Line Roller Collar	RD12898	Bail Hold Support Shaft
RD 2298	Spacer	RD10422	Line Roller	RD12899	Pinion Gear
RD 2362	Spool Support	RD10423	Line Roller Bushing	RD12900	Friction Ring
RD 2409	Spacer	RD10444	Screw	RD12901	Bail Trip Strike
RD 3492	Screw	RD10448	Drag Washer	RD12902	Anti-Reverse Cam
RD 3503	Spool Washer	RD10482	Screw	RD12903	Anti-Reverse Cam Spring
RD 3561	Screw	RD10483	Handle Screw Cap	RD12904	Anti-Reverse Lever
RD 4150	Screw	RD10752	Spring Guide A Support	RD12905	Anti-Reverse Lever Cover
RD 4680	Screw	RD10790	Bail Spring	RD12906	Worm Bushing (front)
RD 4749	Screw	RD11156	Key Washer	RD12907	Idle Gear
RD 5040	Screw	RD11159	Bail Spring Guide A	RD12908	Drive Gear
RD 5690	Screw	RD12457	Oscillating Pawl Cover	RD12909	Side Cover
RD 5841	Screw	RD12459	Oscillating Pawl	RD12910	Handle Assembly
RD 6192	Washer	RD12573	Spool Support Collar	RD12911	Oscillating Slider Bushing
RD 6395	Roller Clutch Assembly	RD12885	Drag Knob	RD12912	Oscillating Slider
RD 6524	Worm Bushing (rear)	RD12886	Spool Assembly	RD12913	Rear Protector
RD 7919	Click Spring	RD12887	Main Shaft	RD12914	Worm Shaft Retainer
RD 7920	Click Pin	RD12888	Line Roller Washer	RD12915	Worm Shaft
RD 7926	Screw	RD12889	Bail Trip Lever	RD12916	Oscillating Guide
RD 7945	Nut	RD12890	Bail Arm	RD12917	Body
RD 8337	Screw	RD12891	Bail Spring Cover	RD13185	Ball Bearing
RD 8594	Eared Washer	RD12892	Rotor	RD13188	Ball Bearing
RD 8654	Drag Washers Retainer	RD12893	Bail Hold Support Guard	RD13189	Ball Bearing
RD 8776	Oil Cap	RD12894	Line Roller Support	RD13274	Ball Bearing
RD 9379	Screw	RD12895	Bail Assembly		