# SHIMANO

## TYRNOS A-RB

## TYR-12II

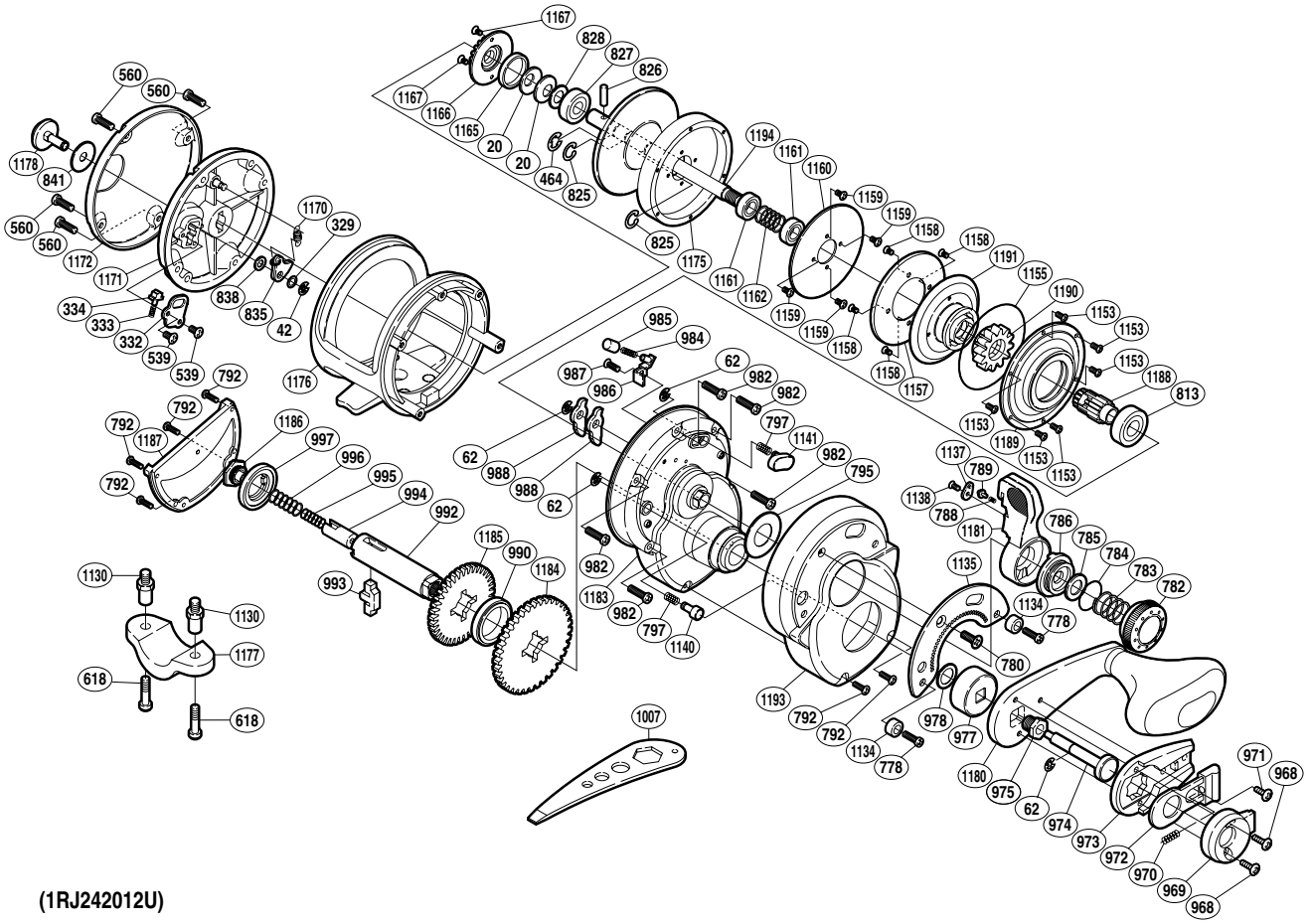


(1RJ242012U)

| Part No. | Description | Part No. | Description | Part No. | Description |
|---|---|---|---|---|---|
| TGT0020 | Coned Disc Spring | TGT0970 | Slide Plate Spring | TGT1160 | Drag Washer |
| TGT0042 | E Lock | TGT0971 | Screw | TGT1161 | Ball Bearing |
| TGT0062 | E Lock | TGT0972 | Slide Plate | TGT1162 | Pressure Release Spring |
| TGT0329 | Spacer | TGT0973 | Handle Bolt Plate | TGT1165 | Click Gear Spacer |
| TGT0332 | Click Spring Retainer | TGT0974 | Push Low Button Shaft | TGT1166 | Click Gear |
| TGT0333 | Click Spring | TGT0975 | Handle Bolt | TGT1167 | Screw |
| TGT0334 | Click Spring Holder | TGT0977 | Drive Shaft Shield | TGT1170 | Click Pawl Spring |
| TGT0464 | E Lock | TGT0978 | Washer | TGT1171 | Left Side Plate |
| TGT0539 | Screw | TGT0982 | Screw | TGT1172 | Left Side Plate Cover |
| TGT0560 | Screw | TGT0984 | Dog Spring | TGT1175 | Spool |
| TGT0778 | Screw | TGT0985 | Dog Spring Guide | TGT1176 | One-Piece Frame |
| TGT0780 | Screw | TGT0986 | Guard Against Dog | TGT1178 | Click Button |
| TGT0782 | Pre-Program Dial | TGT0987 | Screw | TGT1180 | Handle |
| TGT0783 | Dial Spring | TGT0988 | Dog | TGT1181 | Drag Control Lever |
| TGT0784 | O Ring | TGT0990 | Friction Washer | TGT1183 | Right Side Plate |
| TGT0785 | Drag Cam Washer | TGT0992 | Drive Shaft | TGT1184 | Drive Gear A |
| TGT0786 | Lever Shaft Body | TGT0993 | Gear Select Cross Bar | TGT1185 | Drive Gear B |
| TGT0788 | Lever Click Shoe | TGT0994 | Cross Bar Stop | TGT1186 | Drive Shaft Screw |
| TGT0789 | Lever Click | TGT0995 | Drive Shaft Spring B | TGT1187 | Right Side Seal |
| TGT0792 | Screw | TGT0996 | Drive Shaft Spring | TGT1188 | Pinion Gear A |
| TGT0795 | Lever Thrust Ring | TGT0997 | Friction Washer | TGT1189 | Cooling Shield |
| TGT0797 | Pressure Spring | TGT1134 | Screw Shield | TGT1190 | Pinion Gear B |
| TGT0813 | Ball Bearing | TGT1135 | Lever Quadrant | TGT1191 | Pinion Guard |
| TGT0825 | C Lock | TGT1137 | Lever Click Cover | TGT1193 | Right Side Plate Cover |
| TGT0826 | Cross Pin | TGT1138 | Screw | TGT1194 | Spool Shaft |
| TGT0827 | Ball Bearing | TGT1140 | Free Spool Detent | | |
| TGT0828 | Bearing Thrust Washer | TGT1141 | Strike Stop | | |
| TGT0835 | Click Pawl | TGT1153 | Screw | TGT0618 | Rod Clamp Bolt (accessory) |
| TGT0838 | Spacer | TGT1155 | O Ring | TGT1130 | Rod Clamp Nut (accessory) |
| TGT0841 | Click Button Spacer | TGT1157 | Drag Plate | TGT1177 | Rod Clamp (accessory) |
| TGT0968 | Screw | TGT1158 | Screw | | |
| TGT0969 | Push Button Shield | TGT1159 | Screw | TGT1007 | Wrench (accessory) |