SHIMANO®

TWIN POWER A-RB

TP-6000FA

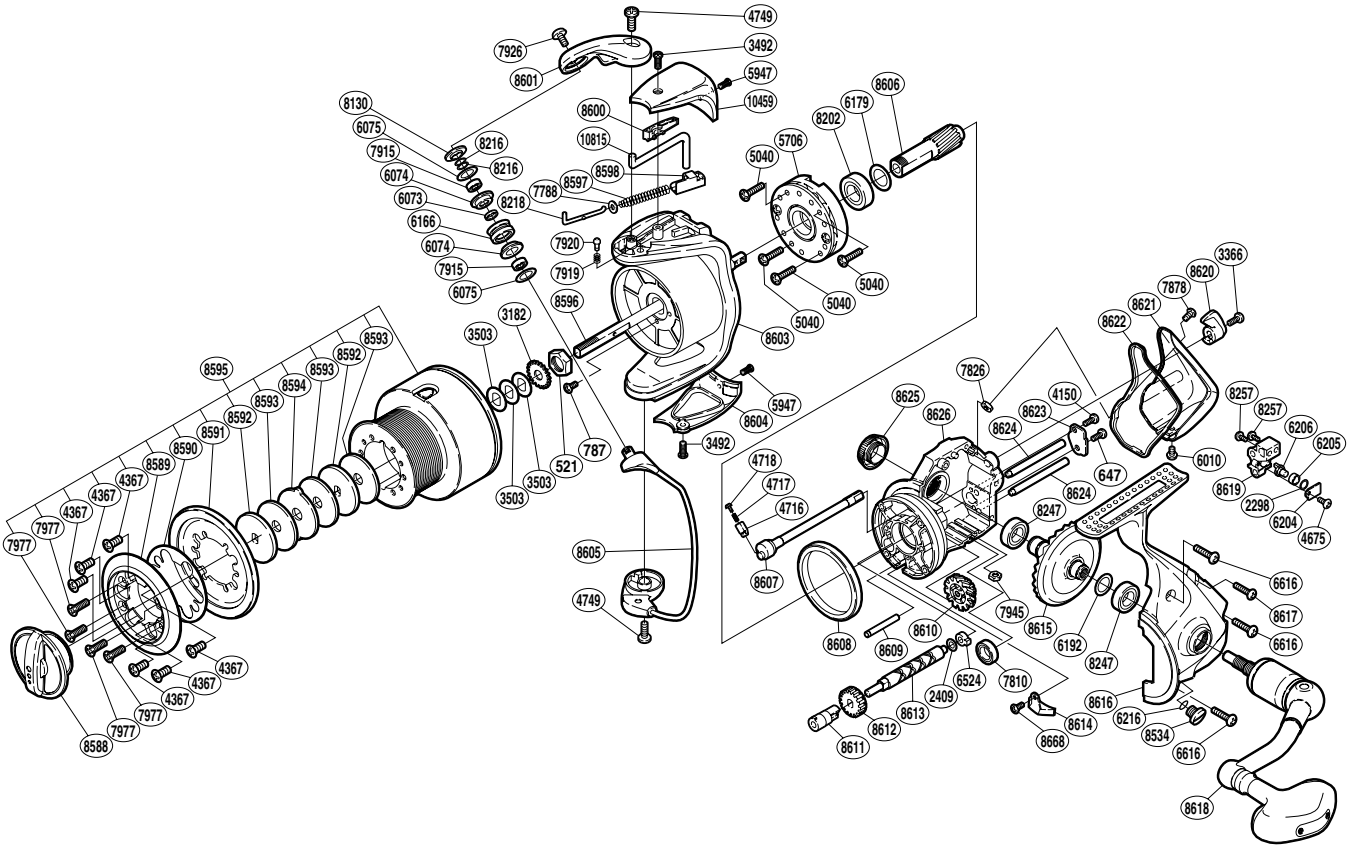

Part No.	Description	Part No.	Description	Part No.	Description
RD 0521	Rotor Nut	RD 6524	Worm Bushing (rear)	RD 8600	Bail Trip Cover
RD 0647	Worm Shaft Retainer Screw (B)	RD 6616	Side Cover Screw (large)	RD 8601	Bail Arm
RD 0787	Nut Lock Screw	RD 7788	Spring Guide (A) Support	RD 8603	Rotor
RD 2298	Spacer	RD 7810	Ball Bearing	RD 8604	Bail Hold Support Guard
RD 2409	Worm Shaft Spacer	RD 7826	Rear Protector Nut (A)	RD 8605	Bail Assembly
RD 3182	Spool Support	RD 7878	Rear Protector Screw (C)	RD 8606	Pinion Gear
RD 3366	Anti-Reverse Lever Screw	RD 7915	Line Roller Bearing	RD 8607	Anti-Reverse Cam
RD 3492	Protector Screw (A)	RD 7919	Click Spring	RD 8608	Friction Ring
RD 3503	Spool Washer	RD 7920	Click Pin	RD 8609	Idle Gear (B) Shaft
RD 4150	Worm Shaft Retainer Screw (A)	RD 7926	Line Roller Screw	RD 8610	Idle Gear (B)
RD 4367	Spool Ring Screw	RD 7945	Rear Protector Nut (B)	RD 8611	Worm Bushing (front)
RD 4675	Oscillating Pawl Cover Screw	RD 7977	Spool Ring Collar Screw	RD 8612	Idle Gear
RD 4716	Click Spring Guide (B)	RD 8130	Line Roller Washer	RD 8613	Worm Shaft
RD 4717	Click Spring	RD 8202	Ball Bearing	RD 8614	Bail Trip Strike
RD 4718	Click Spring Guide (A)	RD 8216	Adjusting Washer	RD 8615	Drive Gear
RD 4749	Multi-Purpose Screw	RD 8218	Bail Spring Guide (A)	RD 8616	Side Cover
RD 5040	Roller Clutch Screw	RD 8247	Ball Bearing	RD 8617	Side Cover Screw (small)
RD 5706	Roller Clutch Assembly	RD 8257	Slider Retainer Screw	RD 8618	Handle Assembly
RD 5947	Protector Screw (B)	RD 8534	Oil Cap	RD 8619	Oscillating Slider
RD 6010	Rear Protector Screw (D)	RD 8588	Drag Knob	RD 8620	Anti-Reverse Lever
RD 6073	Bearing Spacer	RD 8589	Spool Ring Collar	RD 8621	Rear Protector
RD 6074	Line Roller Bushing	RD 8590	Spool Ring Collar Spacer	RD 8622	Rear Shield
RD 6075	Roller Bearing Seal	RD 8591	Spool Ring	RD 8623	Worm Shaft Retainer
RD 6166	Line Roller	RD 8592	Key Washer	RD 8624	Oscillating Guide
RD 6179	Bearing Washer	RD 8593	Drag Washer	RD 8625	Handle Screw Cap
RD 6192	Drive Gear Washer	RD 8594	Eared Washer	RD 8626	Body
RD 6204	Oscillating Pawl Cover	RD 8595	Spool Assembly	RD 8668	Bail Trip Strike Screw
RD 6205	Oscillating Slider Bushing	RD 8596	Main Shaft	RD10459	Bail Spring Cover
RD 6206	Oscillating Pawl	RD 8597	Bail Spring	RD10815	Bail Trip Lever
RD 6216	“O” Ring	RD 8598	Bail Spring Seat		

(180114)